ISSUE	AMENDMENT	DATE

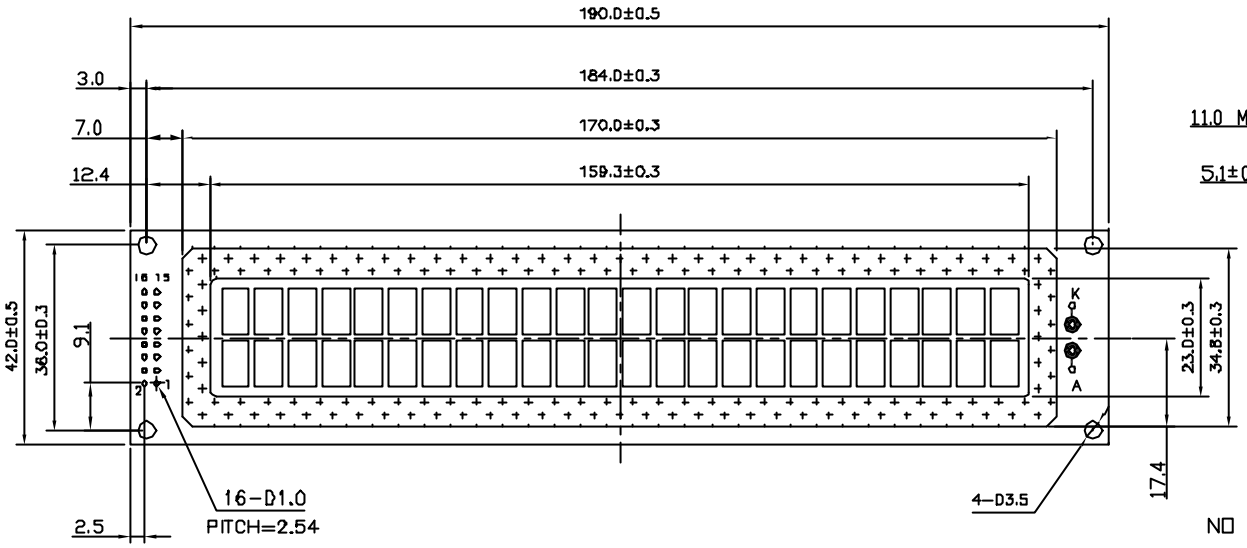

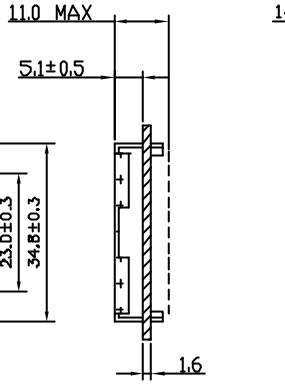

NO LED OR WITH EL

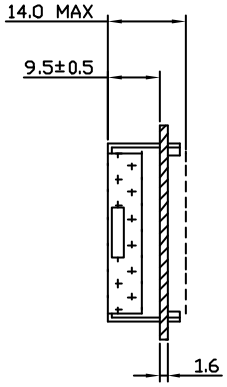

WITH LED03 OR LED04

16 PIN CONNECTION	1	2	3	4	5	6	7	8	9	10	11	12	13	14	15	16
	VSS	VDD	V0	RS	R/W	E	DB0	DB1	DB2	DB3	DB4	DB5	DB6	DB7	LED(+)	LED(-)

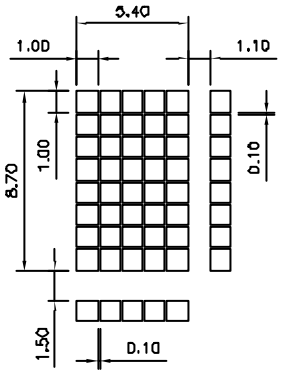

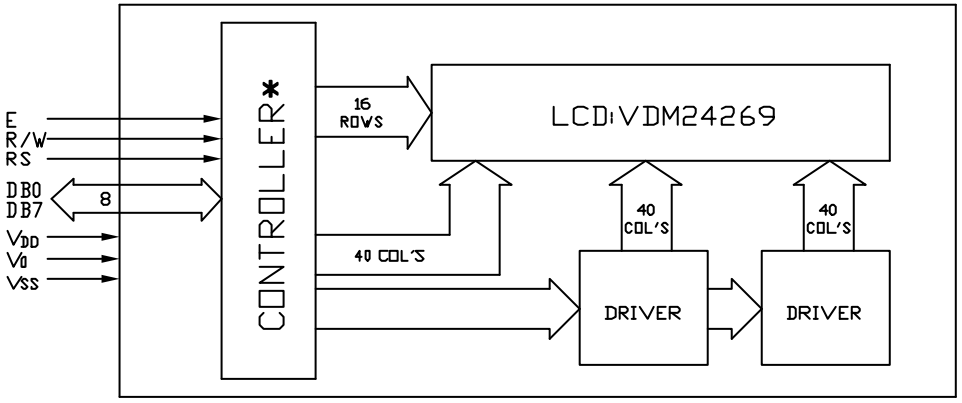

* SPLC780 OR EQUIVALENT

TITLE: SPECIFICATION OF MODULE			
PROJECT NO: MDLS24269SP			
TOLERANCE UNLESS OTHERWISE SPECIFIED:	X.X ±0.3 X.XX ±0.1		
DIMENSIONS IN MM			
MATERIAL:	FINISH:		
SCALE: DO NOT ON SCALE	THICKNESS:		
THIRD ANGLE PROJECTION			
	NAME	SIGE	DATE
DRAWN	PAN WU		01.07.24
CHECKED	CHARM		
APPROVED	K.P. HO		
ITEM NO. MDLS24269SP-XX			
DESCRIPTION: MDLS20269SP-XX			
FILE NO: MODULE MDLS20269SP-XX			REV 0
SHEET 1 OF 1			

VARITRONIX LIMITED