ISSUE	AMENDMENT	DATE

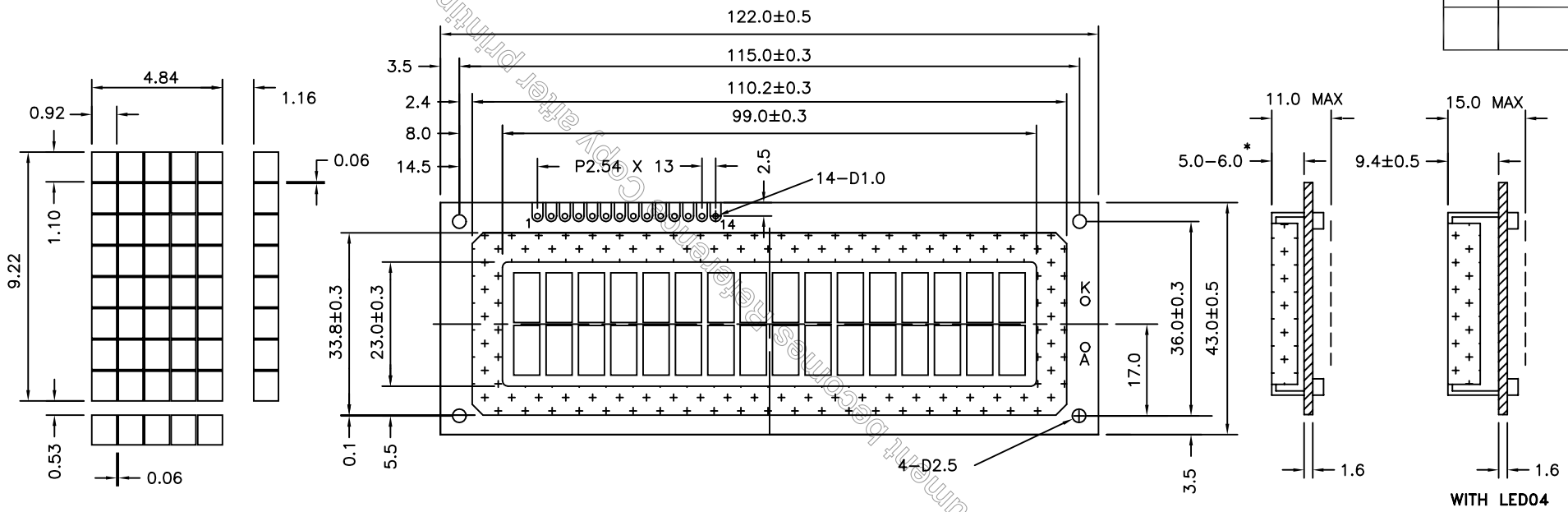

14 PIN CONNECTION	1	2	3	4	5	6	7	8	9	10	11	12	13	14	A	K
	VSS	VDD	V0	RS	R/W	E	DB0	DB1	DB2	DB3	DB4	DB5	DB6	DB7	LED(+)	LED(-)

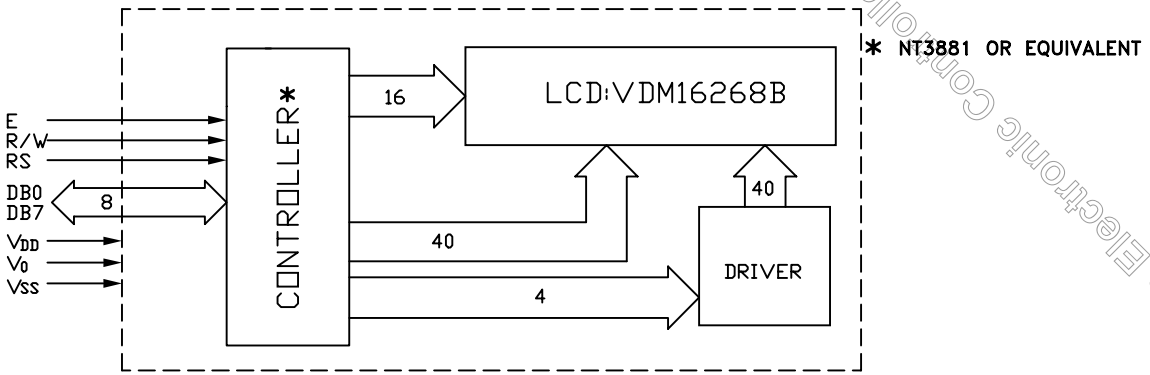

TITLE: SPECIFICATION OF MODULE			
PROJECT NO: MDLS-16268BSP			
TOLERANCE UNLESS OTHERWISE SPECIFIED:	X.X ±0.3 X.XX ±0.1		
DIMENSIONS IN MM			
MATERIAL:	FINISH:		
SCALE: DO NOT ON SCALE	THICKNESS:		
THIRD ANGLE PROJECTION			
	NAME	SIGN	DATE
DRAWN	GAO JIN SHENG		02.07.26
CHECKED	MICHAEL TSE		
APPROVED	CHARM		
ITEM NO. MDLS16268BSP-XX			
DESCRIPTION: MDLS16268BSP			
FILE NO: MDLS16268BSP-XX R0	REV 0		
SHEET 1 OF 1			

VARITRONIX LIMITED

"This Electronic Controlled Document Becomes Uncontrolled Copy after printing out"