ISSUE	AMENDMENT	DATE
1	Modify dimension Modify note	01.12.24
2	ADD ONE VIEW	02.01.17
3	MODIFY DIMENSION AND TOLERANCE	03.08.01
4	MODIFY TOLERANCE	03. 11. 17

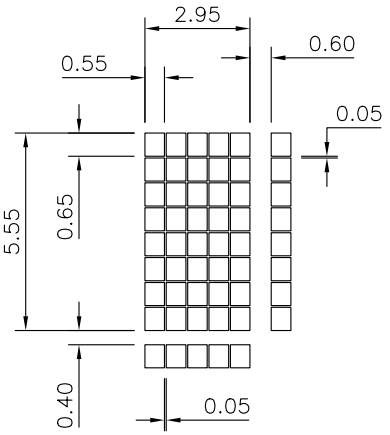

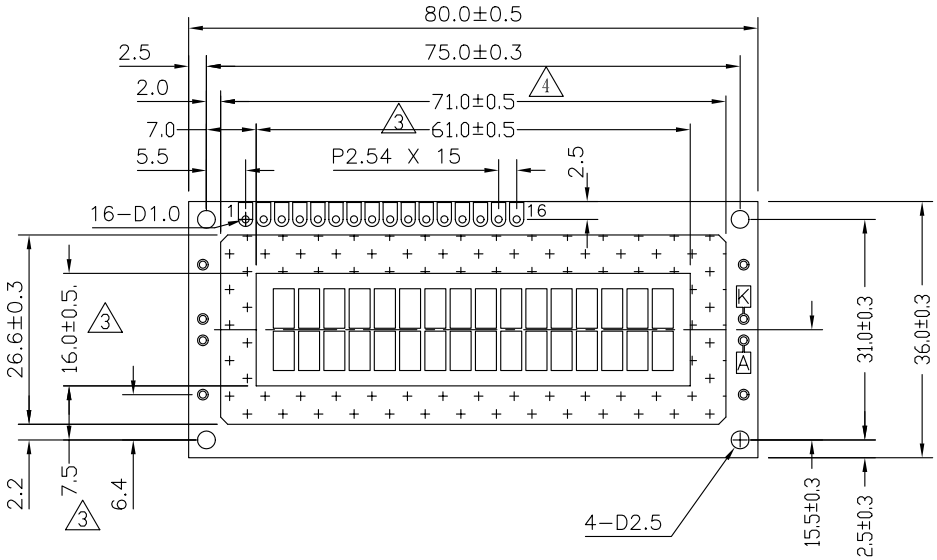

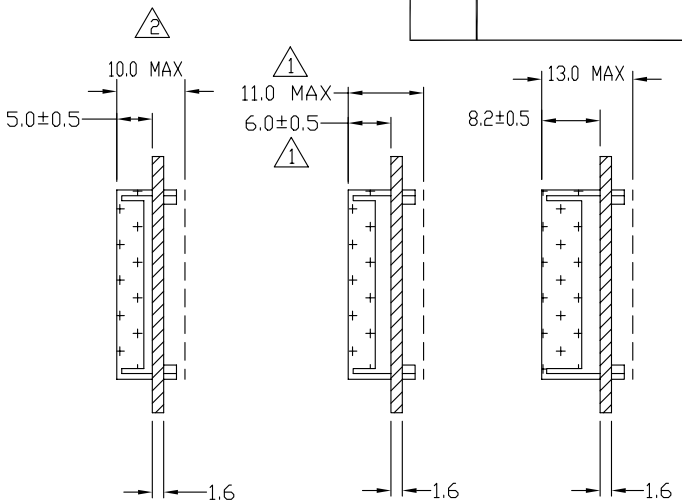

NO LED OR WITH EL WITH LED01 WITH LED04

14 PIN CONNECTION	1	2	3	4	5	6	7	8	9	10	11	12	13	14	K	A
16 PIN CONNECTION	1	2	3	4	5	6	7	8	9	10	11	12	13	14	15	16
	VSS	VDD	V0	RS	R/W	E	DB0	DB1	DB2	DB3	DB4	DB5	DB6	DB7	LED(-)	LED(+)

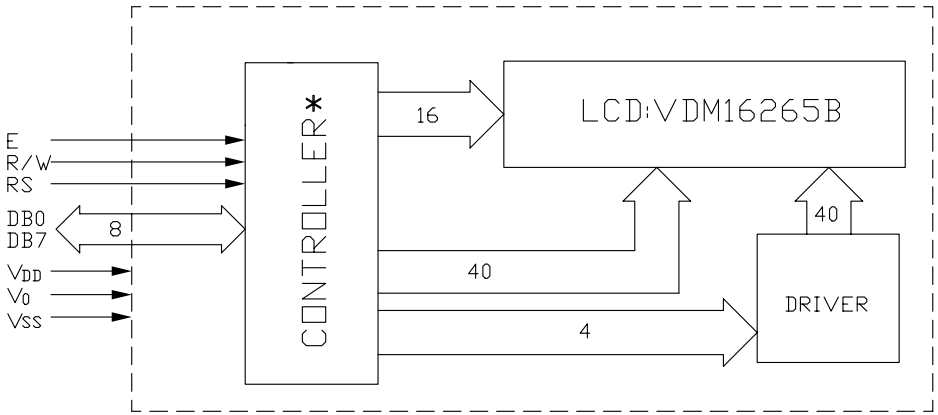

* SPLC780 OR EQUIVALENT

1
NOTES:
"◇" SPECIAL CHARACTERISTIC
"+" SAFETY CHARACTERISTIC
"()" REFERENCE ONLY
"▽" CRITICAL DIMENSION

VARITRONIX LIMITED

TITLE: SPECIFICATION OF MODULE			
PROJECT NO: MDLS16265BSP			
TOLERANCE UNLESS OTHERWISE SPECIFIED:	X.X ±0.3 X.XX ±0.1		
DIMENSIONS IN MM			
MATERIAL:	FINISH:		
SCALE: DO NOT ON SCALE	THICKNESS:		
THIRD ANGLE PROJECTION			
	NAME	SIGN	DATE
DRAWN	LUO XIAN GANG		03.11.17
CHECKED	HE JIAN WEN		
APPROVED	EDWIN HON		
ITEM NO. MDLS16265BSP-XX			
DESCRIPTION: MDLS16265BSP			
FILE NO: MDLS16265BSP-XX R3.DWG		REV 4	
SHEET 1 OF 1			