ISSUE	AMENDMENT	DATE
1	ADD DIMENSION AND SHOW LED04 ADD THE NOTES	03.02.13
2	ADD 14PIN ARRANGEMENT	03.11.17

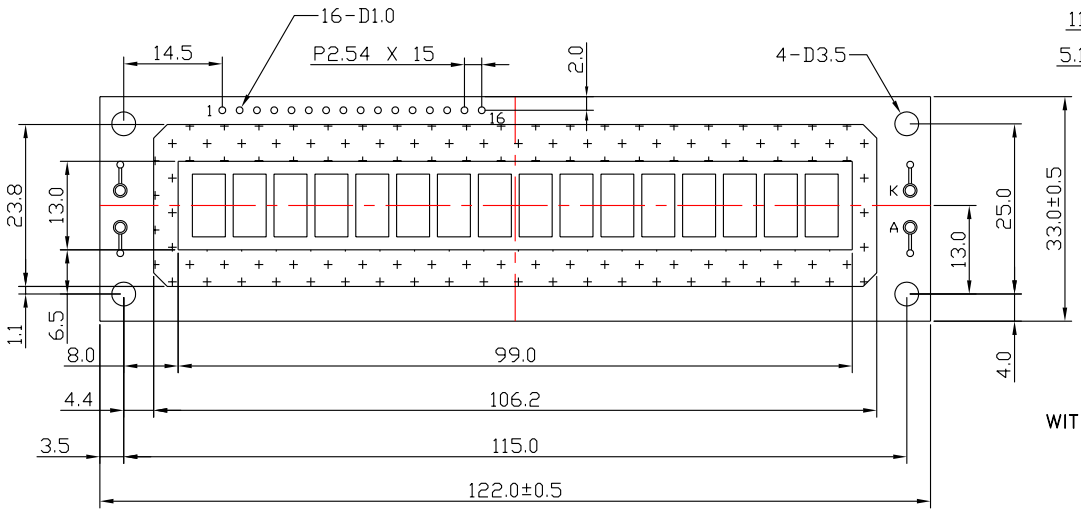

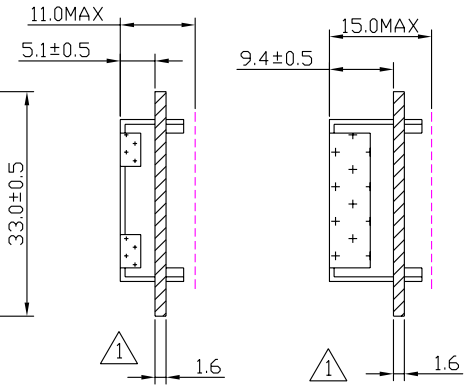

WITH EL OR WITHOUT LED WITH LED04

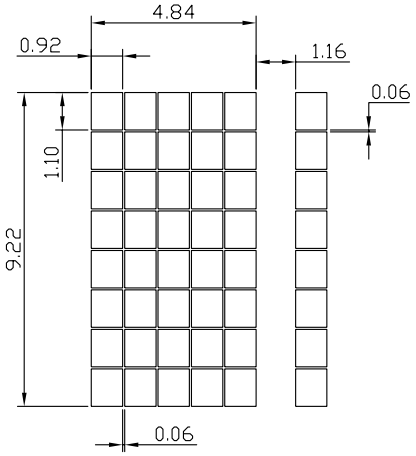

14 PIN CONNECTION	1	2	3	4	5	6	7	8	9	10	11	12	13	14	A	K
16 PIN CONNECTION	1	2	3	4	5	6	7	8	9	10	11	12	13	14	15	16
	VSS	VDD	V0	RS	R/W	E	DB0	DB1	DB2	DB3	DB4	DB5	DB6	DB7	LED(+)	LED(-)

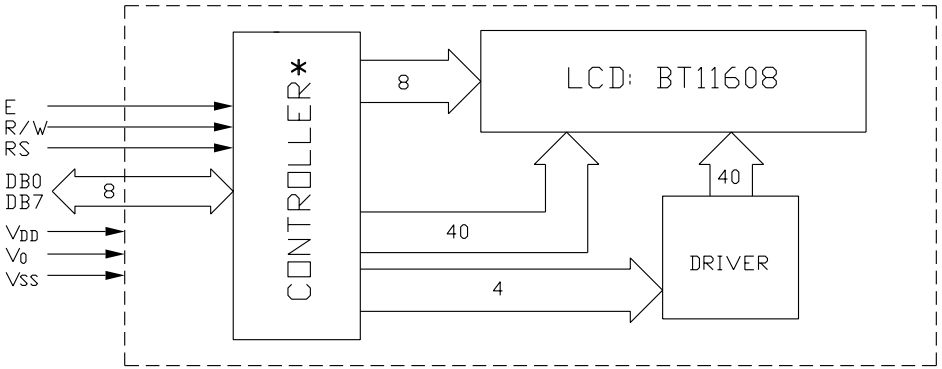

* KS0066 OR EQUIVALENT

NOTES:
"◇" SPECIAL CHARACTERISTIC
"+" SAFETY CHARACTERISTIC
"()" REFERENCE ONLY
"▽" CRITICAL DIMENSION

VARITRONIX LIMITED

TITLE: SPECIFICATION OF MODULE			
PROJECT NO: MDLS16188D			
TOLERANCE UNLESS OTHERWISE SPECIFIED:	X.X ±0.3 X.XX ±0.1		
DIMENSIONS IN MM			
MATERIAL:	FINISH:		
SCALE: DO NOT ON SCALE	THICKNESS:		
THIRD ANGLE PROJECTION			
	NAME	SIGN	DATE
DRAWN	LUO XIAN GANG		03.11.17
CHECKED	HE JIAN WEN		
APPROVED	EDWIN HON		
ITEM NO. MDLS16188D-XX			
DESCRIPTION: MDLS16188D-XX			
FILE NO: MDLS16188D-XX R2.DWG			REV 2
SHEET 1 OF 1			