Height 0.7/0.8mm, Low-profile Type Tactile Switches
TSW-6A / 6 / 6B Series

[] Features

<>With 4.7x4.7 / 4.9x4.9mm dimension and 0.7/0.8mm height, surface-mounting type switches are ideal for high-density mounting.
<>With stem type easy to use is also available. (Stem height 1.5mm).
<>A sharp click feeling of key touch is provided utilizing the tactile feedback characteristic.
<>J-bent terminal and straight terminal are standardized . Permits reflow soldering.
<>Switches are packaged in 12mm wide embossed taping.

[] Applications

<>Digital still camera and digital video camera
<>Audio products, VTR and car navigation system
<>Cellular phone, Personal digital assistance

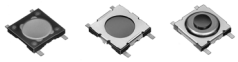

Actual size

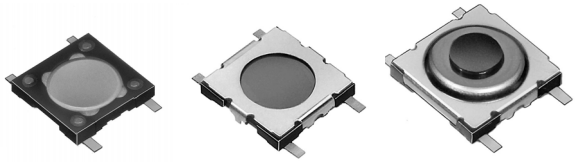

Zoom

[] Products Line

<>0.7mm height low-profile type (TSW-6A)

No	Products No.	Operating force	Travel	Operating life	Terminal style	Qty/reel(pcs.)
1	TSW-6A-1-10-T50	1.0N	0.25mm	500,000 cycles	Straight	5,000 (Minimum packing unit)
2	TSW-6A-2-10-T50				J-bent	
1	TSW-6A-1-16-T50	1.6N			Straight	
2	TSW-6A-2-16-T50				J-bent	
1	TSW-6A-1-26-T50	2.6N		100,000 cycles	Straight	
2	TSW-6A-2-26-T50				J-bent	

<>With metal cover, 0.8mm height low-profile type (TSW-6)

No	Products No.	Operating force	Travel	Operating life	Terminal style	Qty/reel(pcs.)
3	TSW-6-1-10-T50	1.0N	0.25mm	500,000 cycles	Straight	5,000 (Minimum packing unit)
4	TSW-6-2-10-T50				J-bent	
3	TSW-6-1-16-T50	1.6N			Straight	
4	TSW-6-2-16-T50				J-bent	
3	TSW-6-1-26-T50	2.6N		100,000 cycles	Straight	
4	TSW-6-2-26-T50				J-bent	

<>With stem type (TSW-6B)

No	Products No.	Operating force	Travel	Operating life	Terminal style	Qty/reel(pcs.)
5	TSW-6B-1-10-T40	1.0N	0.25mm	500,000 cycles	Straight	4,000 (Minimum packing unit)
6	TSW-6B-2-10-T40				J-bent	
5	TSW-6B-1-16-T40	1.6N			Straight	
6	TSW-6B-2-16-T40				J-bent	
5	TSW-6B-1-26-T40	2.6N		100,000 cycles	Straight	
6	TSW-6B-2-26-T40				J-bent	

Typical Specifications

Item	Specifications
Ratings (max.) (Resistive load)	50mA 12V DC
Contact resistance	100 milliohm max. (Initial)
Insulation resistance	100 megohm min. 100V DC
Withstanding voltage	250V AC for 1min.
Operating temperature range	-20 to +70 degree Celsius
Storage temperature range	-40 to +80 degree Celsius (except carrier tape)

Dimensions

Unit : mm

No	Style	P.C.B reference Land Dimensions Circuit Diagram (TOP VIEW)
1	0.7mm height low-profile type, Straight terminal TSW-6A-1-10-T50 , TSW-6A-1-16-T50 , TSW-6A-1-26-T50 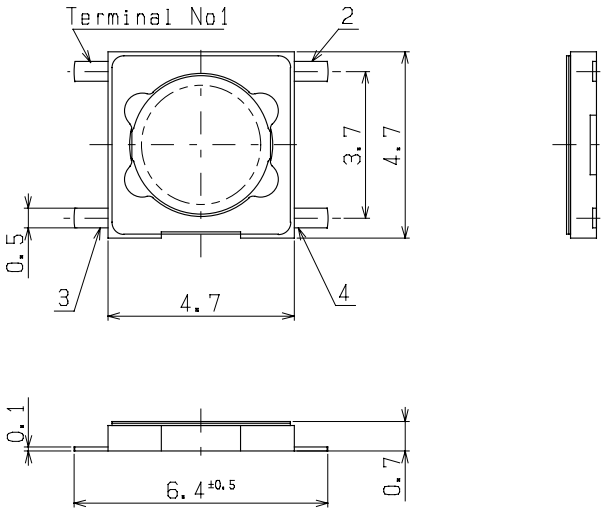	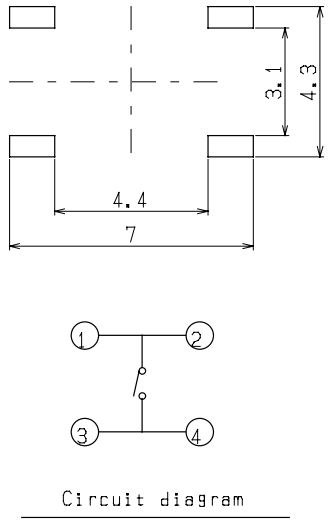
2	0.7mm height low-profile type, J-bent terminal TSW-6A-2-10-T50 , TSW-6A-2-16-T50 , TSW-6A-2-26-T50 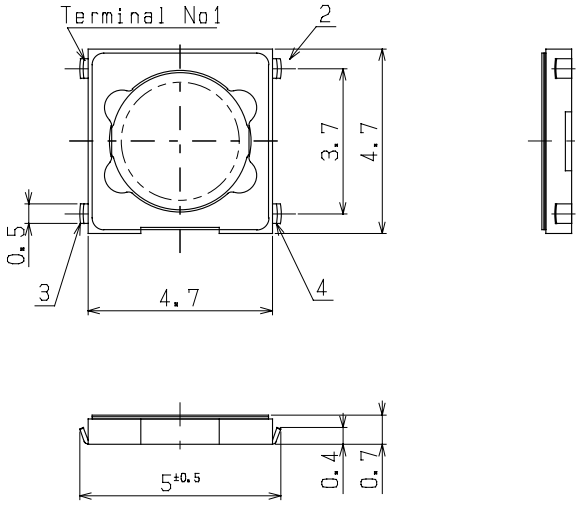	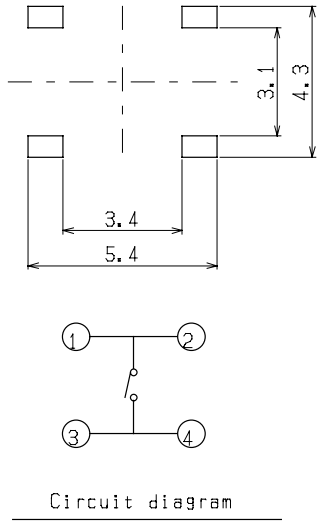

Dimensions

Unit : mm

No	Style	P.C.B reference Land Dimensions Circuit Diagram (TOP VIEW)
3	With metal cover, 0.8mm height low-profile type, Straight terminal TSW-6-1-10-T50 , TSW-6-1-16-T50 , TSW-6-1-26-T50 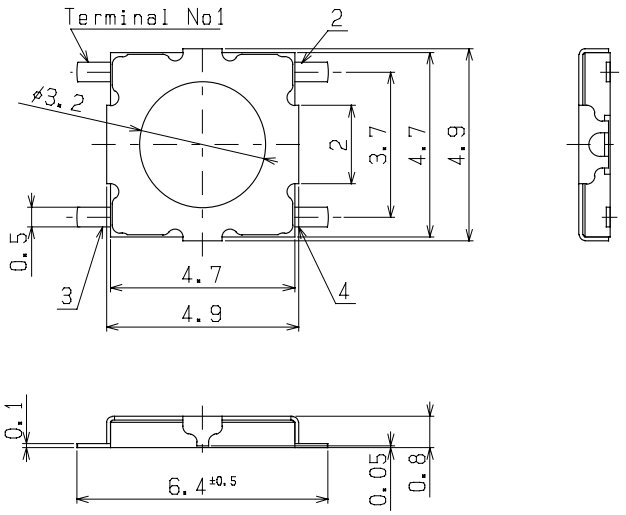 	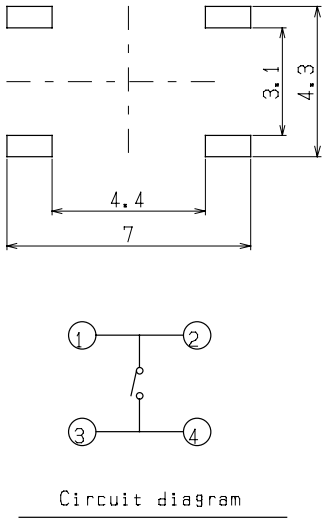
4	With metal cover, 0.8mm height low-profile type, J-bent terminal TSW-6-2-10-T50 , TSW-6-2-16-T50 , TSW-6-2-26-T50 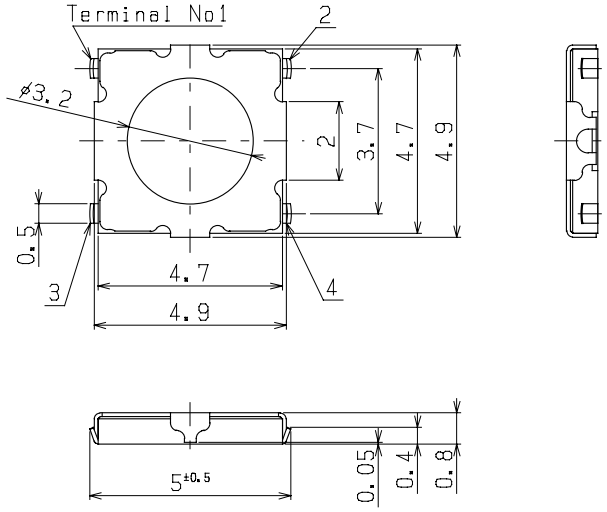 	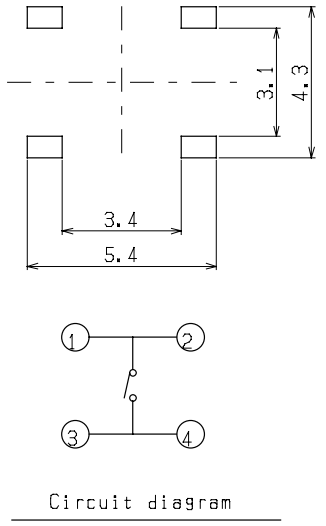
5	With stem type, Straight terminal TSW-6B-1-10-T50 , TSW-6B-1-16-T50 , TSW-6B-1-26-T50 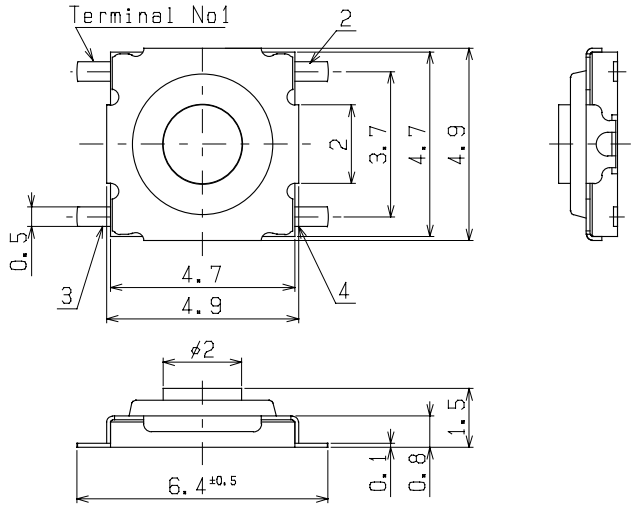 	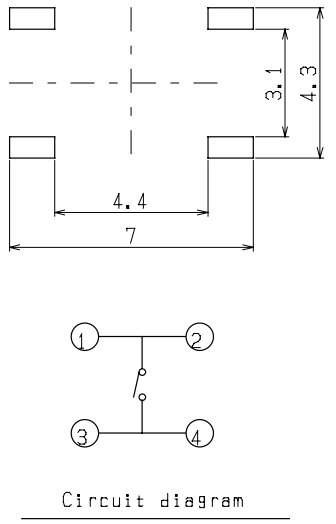

Dimensions

Unit : mm

No	Style	P.C.B reference Land Dimensions Circuit Diagram (TOP VIEW)
6	With stem type, J-bent terminal TSW-6B-2-10-T50 , TSW-6B-2-16-T50 , TSW-6B-2-26-T50 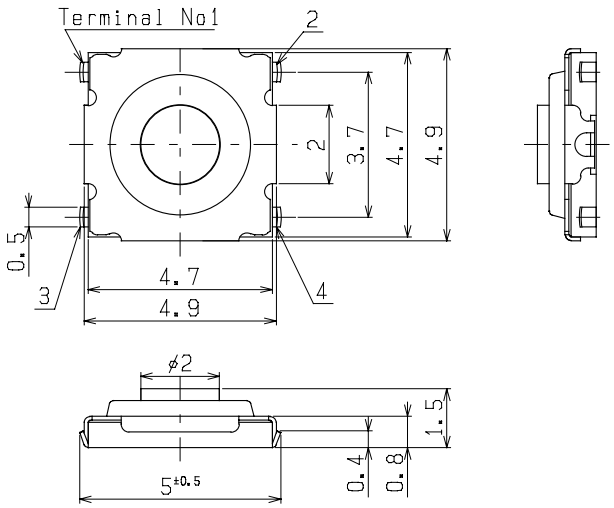	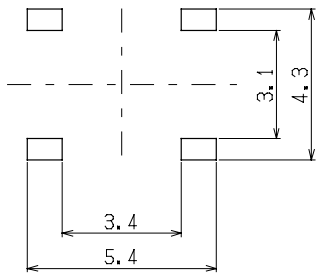 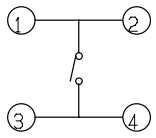 Circuit diagram

Notes

1. The appearance and specifications of the product may be modified to improve its performance without prior notice.
2. This catalog shows only outline specifications. When using the product, please obtain formal specifications.
3. Please see appendix [Cautions in Using Switches.]
4. The minimum packing unit for taping specification is shown above. It is requested that the quantity of the order shall be an integer multiple of the minimum packing units.
5. Please set the reflow soldering condition confirming under the actual conditions of mass-production.
6. Characteristics of switch may change due to the warping of the circuit writing board. Consideration should be given to the pattern design and layout.
7. This push switch is not washable.
8. This push switch permits reflow soldering and the switch has the possibility to be mounted on the edge of the PC board. But auto-dip shall not be done after the mounting of the switch because of the big possibility of the penetration of the soldering flux into the contacts sliding portion.
9. Larger stress than specified and/ or shock shall not be applied during switch operation. Pressure to the push button shall be applied to the whole surface equally and avoid the pressure to the specific one portion.
10. The operating characteristic may change if force is exerted to the top of the cover.
11. Do not press the portion of the film by the sharp edged object.
12. In manual soldering, consider that the abnormal pressure of the soldering iron shall not be applied to the tip of the terminal as well do not apply any pressure for more than 1 minute after soldering.
13. Care shall be taken so that the flux shall not penetrate into the terminal portion.