Blue Creation

BC127 Development Board v4
www.bluecreation.com

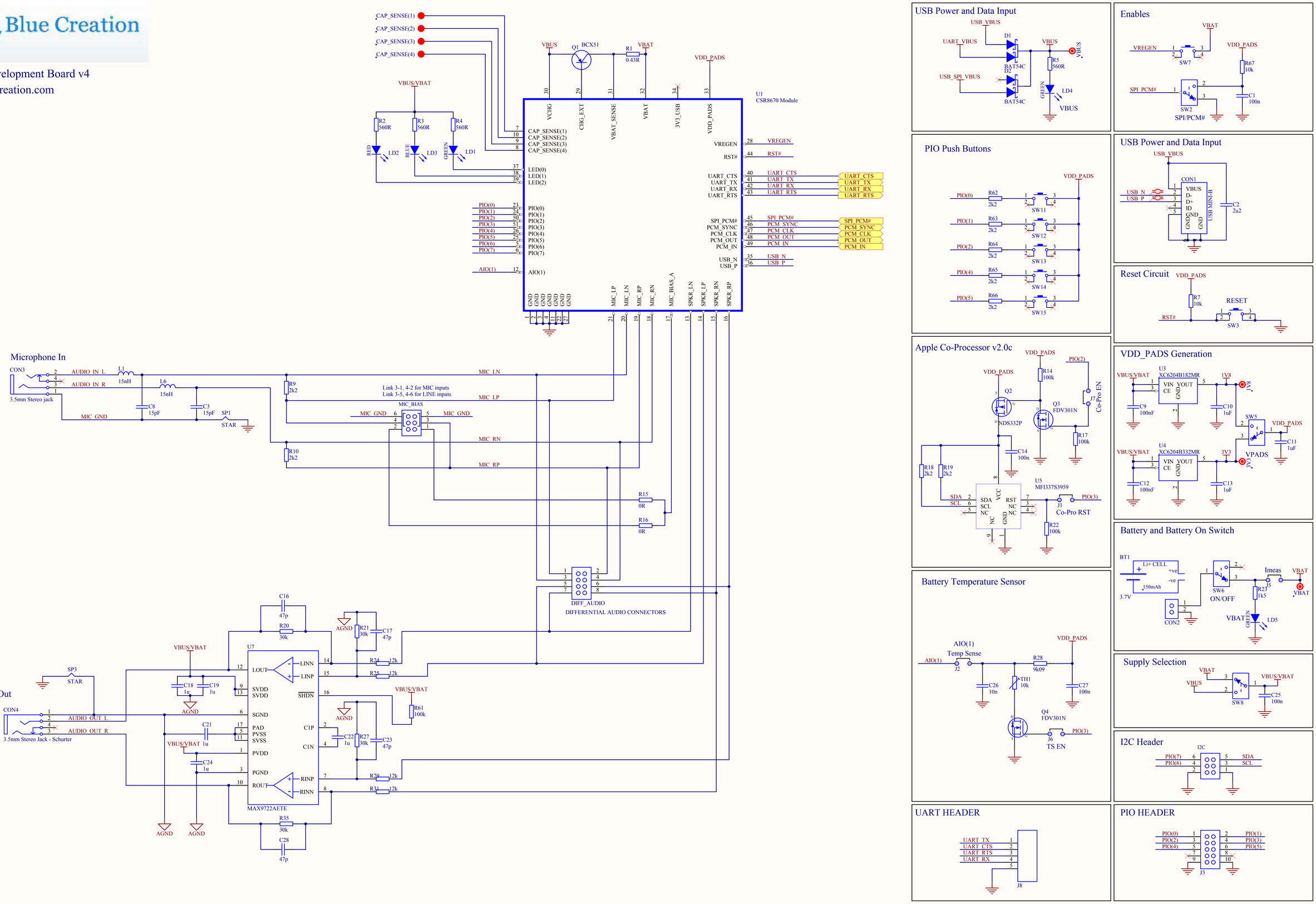

Blue Creation
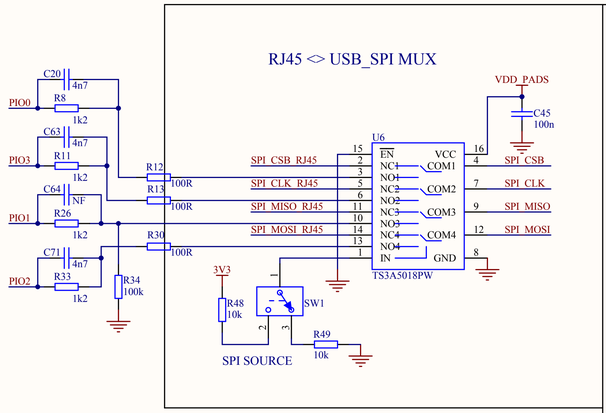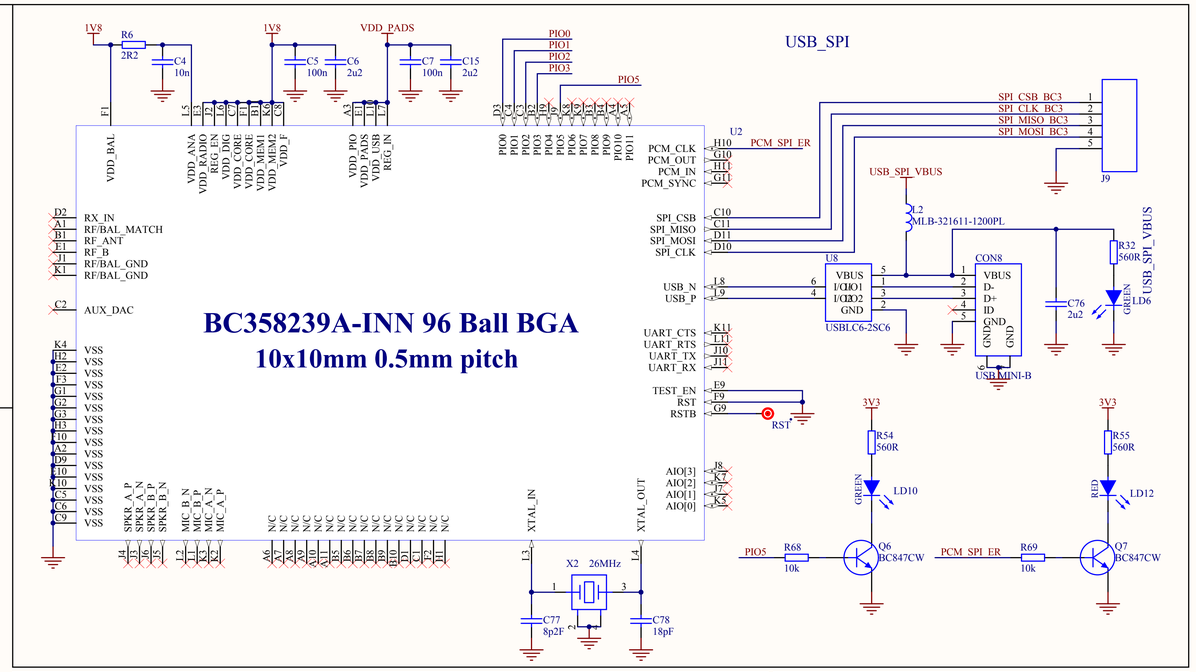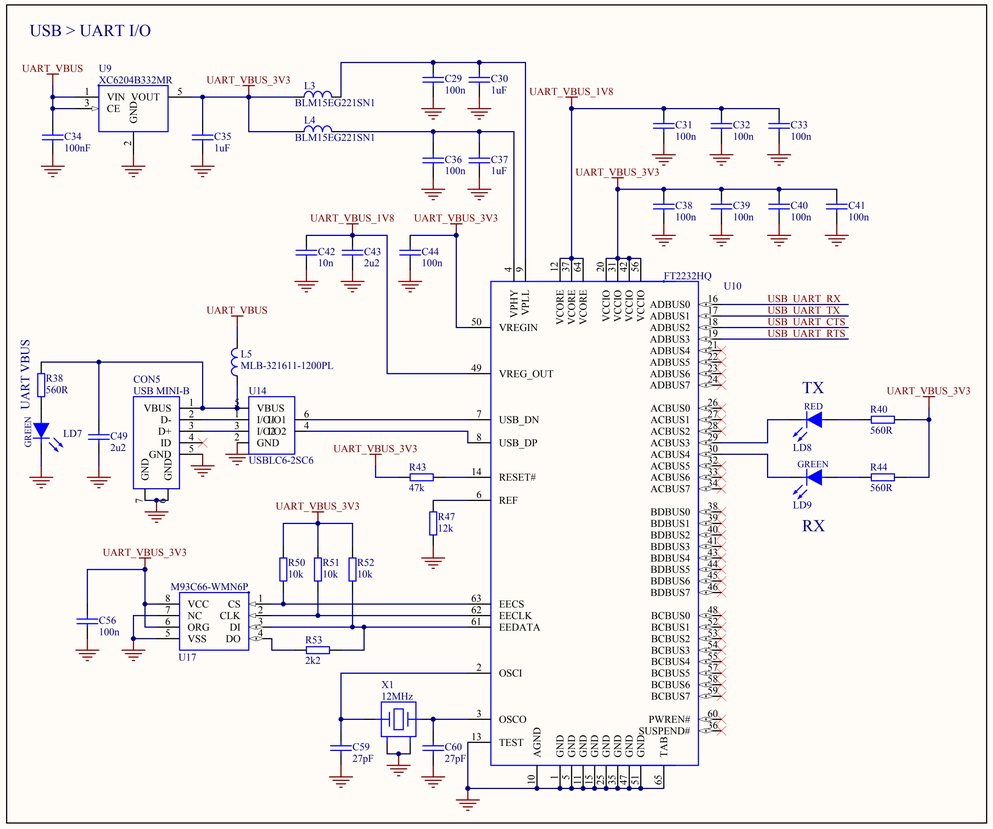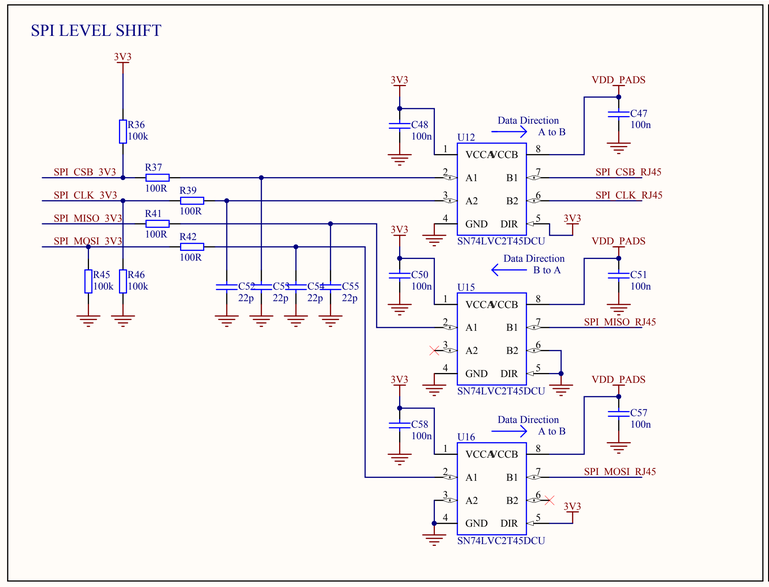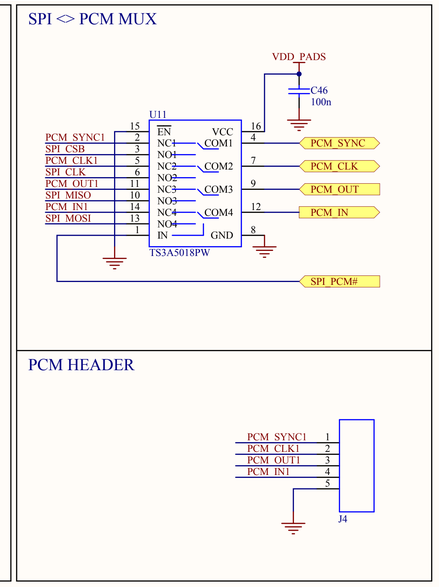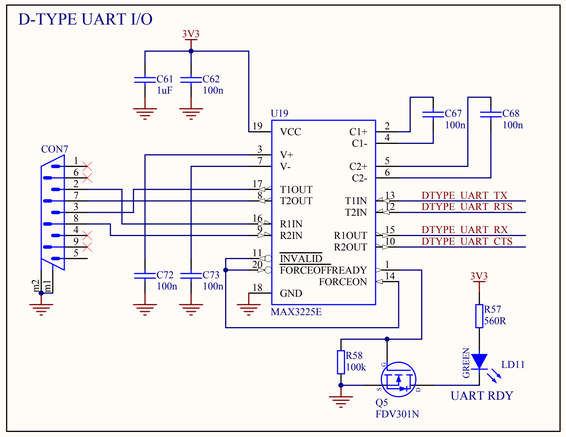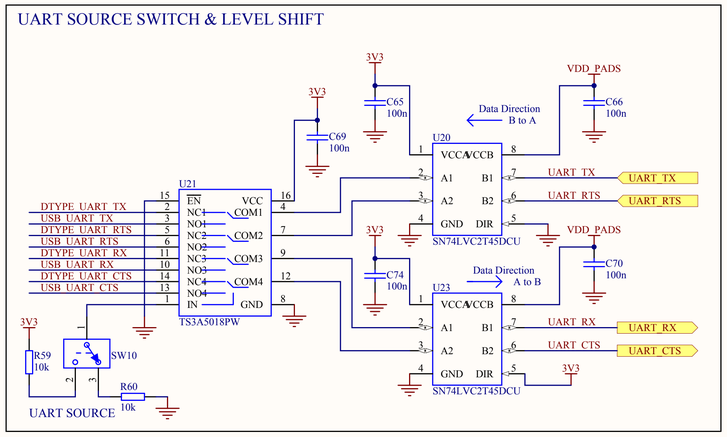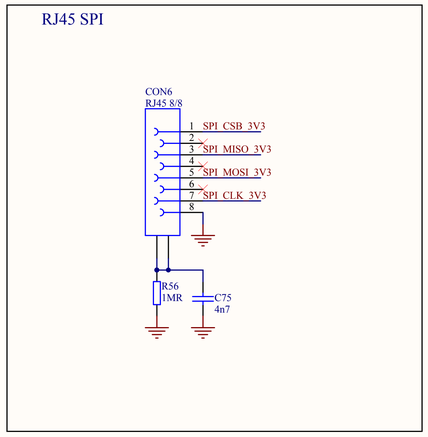
BC127 Development Board v4
www.bluecreation.com