HEF4528B

Dual monostable multivibrator

Rev. 7 — 22 November 2011 Product data sheet

1. General description

The HEF4528B is a dual retriggerable-resetable monostable multivibrator. Each multivibrator has an active LOW input (n$\overline{A}$), and active HIGH input (nB), an active LOW clear direct input (n$\overline{CD}$), an output (nQ) and its complement (n$\overline{Q}$), and two external timing component connecting pins (nCEXT, always connected to ground, and nREXT/CEXT).

An external timing capacitor (C_{EXT}) must be connected between nCEXT and nREXT/CEXT and an external resistor (R_{EXT}) must be connected between nREXT/CEXT and V_{DD}. The output pulse duration is determined by the external timing components C_{EXT} and R_{EXT}. A HIGH-to-LOW transition on n$\overline{A}$ when nB is LOW or a LOW-to-HIGH transition on nB when n$\overline{A}$ is HIGH produces a positive pulse (LOW-HIGH-LOW) on nQ and a negative pulse (HIGH-LOW-HIGH) on n$\overline{Q}$ if the n$\overline{CD}$ is HIGH. A LOW on n$\overline{CD}$ forces nQ LOW, n$\overline{Q}$ HIGH and inhibits any further pulses until n$\overline{CD}$ is HIGH.

It operates over a recommended V_{DD} power supply range of 3 V to 15 V referenced to V_{SS} (usually ground). Unused inputs must be connected to V_{DD}, V_{SS}, or another input.

2. Features and benefits

- Fully static operation
- 5 V, 10 V, and 15 V parametric ratings
- Standardized symmetrical output characteristics
- Specified from −40 °C to +85 °C
- Complies with JEDEC standard JESD 13-B

3. Ordering information

Table 1. Ordering information

All types operate from −40 °C to +85 °C.

Type number	Package		
	Name	Description	Version
HEF4528BP	DIP16	plastic dual in-line package; 16 leads (300 mil)	SOT38-4
HEF4528BT	SO16	plastic small outline package; 16 leads; body width 3.9 mm	SOT109-1

4. Functional diagram

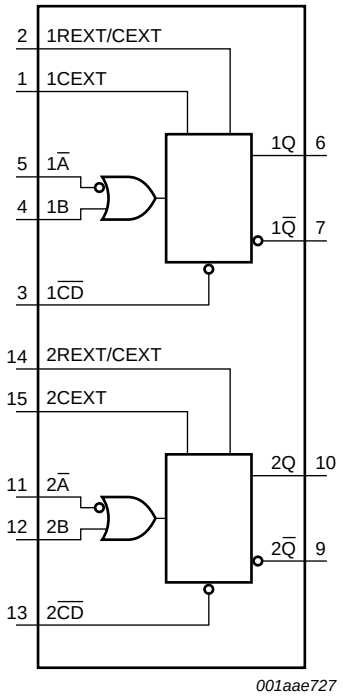

Fig 1. Functional diagram

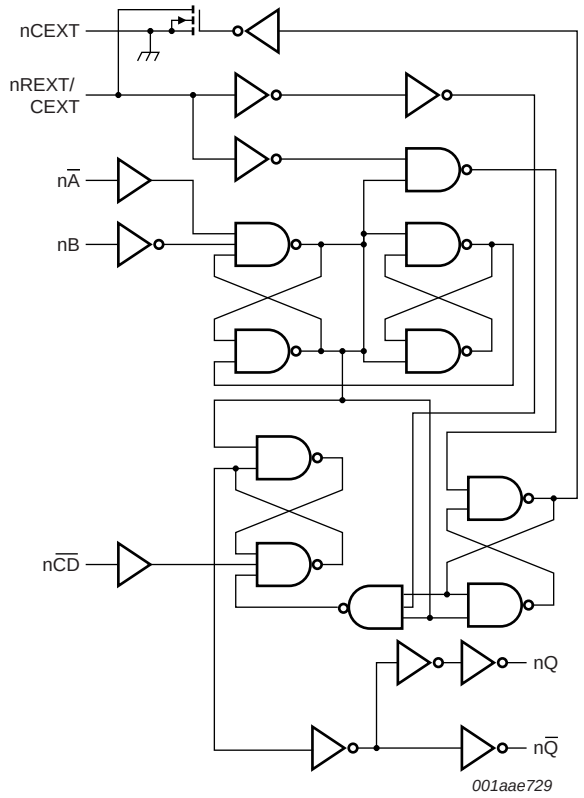

Fig 2. Logic diagram for one monostable multivibrator

All information provided in this document is subject to legal disclaimers.

© NXP B.V. 2011. All rights reserved.

5. Pinning information

5.1 Pinning

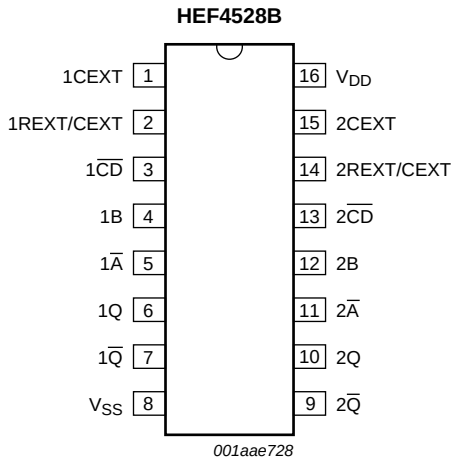

Fig 3. Pin configuration

5.2 Pin description

Table 2. Pin description

Symbol	Pin	Description
1CEXT, 2CEXT	1, 15	external capacitor connection (always connected to ground)
1REXT/CEXT, 2REXT/CEXT	2, 14	external capacitor/resistor connection
1$\overline{CD}$, 2$\overline{CD}$	3, 13	clear direct input (active LOW)
1B, 2B	4, 12	input (LOW-to-HIGH triggered)
1$\overline{A}$, 2$\overline{A}$	5, 11	input (HIGH-to-LOW triggered)
1Q, 2Q	6, 10	output
1$\overline{Q}$, 2$\overline{Q}$	7, 9	complementary output (active LOW)
V_{SS}	8	ground supply voltage
V_{DD}	16	supply voltage

All information provided in this document is subject to legal disclaimers.

© NXP B.V. 2011. All rights reserved.

6. Functional description

Table 3. Function table[1]

Inputs			Outputs	
$\overline{A}$	B	$\overline{CD}$	Q	$\overline{Q}$
↓	L	H	⎍	⎏
H	↑	H	⎍	⎏
X	X	L	L	H

[1] H = HIGH voltage level; L = LOW voltage level; X = don't care;
↑ = positive-going transition; ↓ = negative-going transition;

⎍ = one HIGH level output pulse, with the pule width determined by C_{EXT} and R_{EXT};

⎏ = one LOW level output pulse, with the pulse width determined by C_{EXT} and R_{EXT}.

7. Limiting values

Table 4. Limiting values

In accordance with the Absolute Maximum Rating System (IEC 60134). Voltages are referenced to V_{SS} = 0 V (ground).

Symbol	Parameter	Conditions		Min	Max	Unit
V_{DD}	supply voltage			–0.5	+18	V
I_{IK}	input clamping current	V_I < –0.5 V or V_I > V_{DD} + 0.5 V		-	±10	mA
V_I	input voltage			–0.5	V_{DD} + 0.5	V
I_{OK}	output clamping current	V_I < –0.5 V or V_I > V_{DD} + 0.5 V		-	±10	mA
$I_{I/O}$	input/output current			-	±10	mA
I_{DD}	supply current			-	50	mA
T_{stg}	storage temperature			–65	+150	°C
T_{amb}	ambient temperature			–40	+85	°C
P_{tot}	total power dissipation	T_{amb} = –40 °C to +85 °C				
		DIP16 package	[1]	-	750	mW
		SO16 package	[2]	-	500	mW
P	power dissipation	per output		-	100	mW

[1] For DIP16 package: P_{tot} derates linearly with 12 mW/K above 70 °C.

[2] For SO16 package: P_{tot} derates linearly with 8 mW/K above 70 °C.

All information provided in this document is subject to legal disclaimers.

© NXP B.V. 2011. All rights reserved.

8. Recommended operating conditions

Table 5. Recommended operating conditions

Symbol	Parameter	Conditions	Min	Typ	Max	Unit
V_{DD}	supply voltage		3	-	15	V
V_I	input voltage		0	-	V_{DD}	V
T_{amb}	ambient temperature	in free air	–40	-	+85	°C
$\Delta t/\Delta V$	input transition rise and fall rate	V_{DD} = 5 V	-	-	3.75	μs/V
		V_{DD} = 10 V	-	-	0.5	μs/V
		V_{DD} = 15 V	-	-	0.08	μs/V

9. Static characteristics

Table 6. Static characteristics

V_{SS} = 0 V; V_I = V_{SS} or V_{DD}; unless otherwise specified.

Symbol	Parameter	Conditions	V_{DD}	T_{amb} = –40 °C		T_{amb} = +25 °C		T_{amb} = +85 °C		Unit
				Min	Max	Min	Max	Min	Max	
V_{IH}	HIGH-level input voltage	$\|I_O\|$ < 1 μA	5 V	3.5	-	3.5	-	3.5	-	V
			10 V	7.0	-	7.0	-	7.0	-	V
			15 V	11.0	-	11.0	-	11.0	-	V
V_{IL}	LOW-level input voltage	$\|I_O\|$ < 1 μA	5 V	-	1.5	-	1.5	-	1.5	V
			10 V	-	3.0	-	3.0	-	3.0	V
			15 V	-	4.0	-	4.0	-	4.0	V
V_{OH}	HIGH-level output voltage	$\|I_O\|$ < 1 μA	5 V	4.95	-	4.95	-	4.95	-	V
			10 V	9.95	-	9.95	-	9.95	-	V
			15 V	14.95	-	14.95	-	14.95	-	V
V_{OL}	LOW-level output voltage	$\|I_O\|$ < 1 μA	5 V	-	0.05	-	0.05	-	0.05	V
			10 V	-	0.05	-	0.05	-	0.05	V
			15 V	-	0.05	-	0.05	-	0.05	V
I_{OH}	HIGH-level output current	V_O = 2.5 V	5 V	-	–1.7	-	–1.4	-	–1.1	mA
		V_O = 4.6 V	5 V	-	–0.52	-	–0.44	-	–0.36	mA
		V_O = 9.5 V	10 V	-	–1.3	-	–1.1	-	–0.9	mA
		V_O = 13.5 V	15 V	-	–3.6	-	–3.0	-	–2.4	mA
I_{OL}	LOW-level output current	V_O = 0.4 V	5 V	0.52	-	0.44	-	0.36	-	mA
		V_O = 0.5 V	10 V	1.3	-	1.1	-	0.9	-	mA
		V_O = 1.5 V	15 V	3.6	-	3.0	-	2.4	-	mA
I_I	input leakage current		15 V	-	±0.3	-	±0.3	-	±1.0	μA
I_{DD}	supply current	all valid input combinations; I_O = 0 A	5 V	-	20	-	20	-	150	μA
			10 V	-	40	-	40	-	300	μA
			15 V	-	80	-	80	-	600	μA
C_I	input capacitance		-	-	-	-	7.5	-	-	pF

All information provided in this document is subject to legal disclaimers.

© NXP B.V. 2011. All rights reserved.

10. Dynamic characteristics

Table 7. Dynamic characteristics

V_{SS} = 0 V; T_{amb} = 25 °C; for waveforms see Figure 6; for test circuit see Figure 7; unless otherwise specified.

Symbol	Parameter	Conditions	V_{DD}		Extrapolation formula[1]	Min	Typ	Max	Unit
t_{PHL}	HIGH to LOW propagation delay	$n\overline{A}$ or nB to $n\overline{Q}$; see Figure 5	5 V		113 ns + (0.55 ns/pF)C_L	-	140	280	ns
			10 V		39 ns + (0.23 ns/pF)C_L	-	50	100	ns
			15 V		27 ns + (0.16 ns/pF)C_L	-	35	70	ns
		$n\overline{CD}$ to nQ; see Figure 5	5 V		78 ns + (0.55 ns/pF)C_L	-	105	210	ns
			10 V		29 ns + (0.23 ns/pF)C_L	-	40	85	ns
			15 V		22 ns + (0.16 ns/pF)C_L	-	30	60	ns
t_{PLH}	LOW to HIGH propagation delay	$n\overline{A}$ or nB to nQ; see Figure 5	5 V		128 ns + (0.55 ns/pF)C_L	-	155	305	ns
			10 V		49 ns + (0.23 ns/pF)C_L	-	60	115	ns
			15 V		32 ns + (0.16 ns/pF)C_L	-	40	80	ns
		$n\overline{CD}$ to $n\overline{Q}$; see Figure 5	5 V		93 ns + (0.55 ns/pF)C_L	-	120	240	ns
			10 V		39 ns + (0.23 ns/pF)C_L	-	50	105	ns
			15 V		27 ns + (0.16 ns/pF)C_L	-	35	70	ns
t_t	transition time	nQ, $n\overline{Q}$; see Figure 5	5 V	[2]	10 ns + (1.00 ns/pF)C_L	-	60	120	ns
			10 V		9 ns + (0.42 ns/pF)C_L	-	30	60	ns
			15 V		6 ns + (0.28 ns/pF)C_L	-	20	40	ns
t_{rec}	recovery time	$n\overline{CD}$ to $n\overline{A}$ or nB; see Figure 6	5 V			0	−75	-	ns
			10 V			0	−30	-	ns
			15 V			0	−25	-	ns
t_{su}	set-up time	$n\overline{CD}$ to $n\overline{A}$ or nB; see Figure 6	5 V			0	−105	-	ns
			10 V			0	−40	-	ns
			15 V			0	−25	-	ns
t_W	pulse width	$n\overline{A}$ LOW; minimum width; see Figure 6	5 V			50	25	-	ns
			10 V			30	15	-	ns
			15 V			20	10	-	ns
		nB HIGH; minimum width; see Figure 6	5 V			50	25	-	ns
			10 V			30	15	-	ns
			15 V			20	10	-	ns
		$n\overline{CD}$ LOW; minimum width; see Figure 6	5 V			60	30	-	ns
			10 V			35	15	-	ns
			15 V			25	10	-	ns
		nQ or $n\overline{Q}$; R_{EXT} = 5 kΩ; C_{EXT} = 15 pF; see Figure 6	5 V	[3]		-	235	-	ns
			10 V			-	155	-	ns
			15 V			-	140	-	ns
		nQ or $n\overline{Q}$; R_{EXT} = 10 kΩ; C_{EXT} = 1 nF; see Figure 6	5 V	[4]		-	5.45	-	μs
			10 V			-	4.95	-	μs
			15 V			-	4.85	-	μs

All information provided in this document is subject to legal disclaimers.

© NXP B.V. 2011. All rights reserved.

Table 7. Dynamic characteristics *...continued*

V_{SS} = 0 V; T_{amb} = 25 °C; for waveforms see Figure 6; for test circuit see Figure 7; unless otherwise specified.

Symbol	Parameter	Conditions	V_{DD}	Extrapolation formula[1]	Min	Typ	Max	Unit
Δt_W	pulse width variation	nQ output variation over temperature range	5 V	[5]	-	±3	-	%
			10 V		-	±2	-	%
			15 V		-	±2	-	%
		nQ output variation over voltage range V_{DD} ± 5 %	5 V		-	±2	-	%
			10 V		-	±1	-	%
			15 V		-	±1	-	%
R_{EXT}	external timing resistor	see Figure 4	5 V		5	-	2	MΩ
			10 V		5	-	2	MΩ
			15 V		5	-	2	MΩ
C_{EXT}	external timing capacitor	see Figure 4	5 V		no limits			
			10 V		no limits			
			15 V		no limits			

[1] The typical values of the propagation delay and transition times are calculated from the extrapolation formulas shown (C_L in pF).

[2] t_t is the same as t_{THL} and t_{TLH}.

[3] For other R_{EXT}, C_{EXT} combinations and C_{EXT} < 0.01 μF see Figure 4.

[4] For other R_{EXT}, C_{EXT} combinations and C_{EXT} > 0.01 μF use formula $t_W = K \times R_{EXT} \times C_{EXT}$.
where: t_W = output pulse width (s);
R_{EXT} = external timing resistor (Ω);
C_{EXT} = external timing capacitor (F);
K = 0.42 for V_{DD} = 5 V;
K = 0.32 for V_{DD} = 10 V;
K = 0.30 for V_{DD} = 15 V.

[5] T_{amb} = −40 °C to +85 °C; Δt_W is referenced to t_W at T_{amb} = 25 °C.

Table 8. Dynamic power dissipation P_D

P_D can be calculated from the formulas shown. V_{SS} = 0 V; $t_r = t_f \leq 20$ ns; T_{amb} = 25 °C.

Symbol	Parameter	V_{DD}	Typical formula for P_D (μW)	where:
P_D	dynamic power dissipation	5 V	$P_D = 4000 \times f_i + \Sigma(f_o \times C_L) \times V_{DD}^2$	f_i = input frequency in MHz;
		10 V	$P_D = 20000 \times f_i + \Sigma(f_o \times C_L) \times V_{DD}^2$	f_o = output frequency in MHz;
		15 V	$P_D = 59000 \times f_i + \Sigma(f_o \times C_L) \times V_{DD}^2$	C_L = output load capacitance in pF;
				V_{DD} = supply voltage in V;
				$\Sigma(f_o \times C_L)$ = sum of the outputs.

All information provided in this document is subject to legal disclaimers.

© NXP B.V. 2011. All rights reserved.

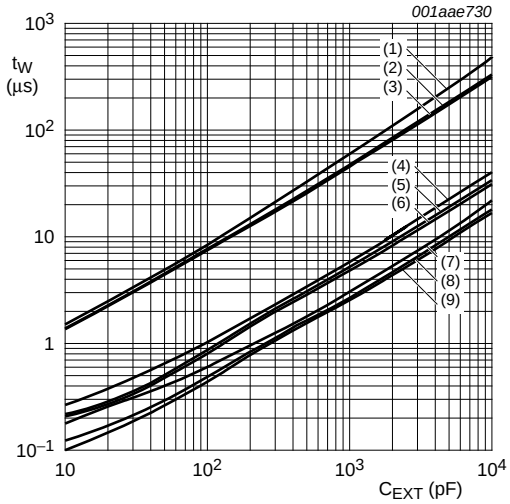

(1) R_{EXT} = 100 kΩ, V_{DD} = 5 V.

(2) R_{EXT} = 100 kΩ, V_{DD} = 10 V.

(3) R_{EXT} = 100 kΩ, V_{DD} = 15 V.

(4) R_{EXT} = 10 kΩ, V_{DD} = 5 V.

(5) R_{EXT} = 10 kΩ, V_{DD} = 10 V.

(6) R_{EXT} = 10 kΩ, V_{DD} = 15 V.

(7) R_{EXT} = 5 kΩ, V_{DD} = 5 V.

(8) R_{EXT} = 5 kΩ, V_{DD} = 10 V.

(9) R_{EXT} = 5 kΩ, V_{DD} = 15 V.

Fig 4. Output pulse width (t_W) as a function of external timing capacitor (C_{EXT})

All information provided in this document is subject to legal disclaimers.

© NXP B.V. 2011. All rights reserved.

11. Waveforms

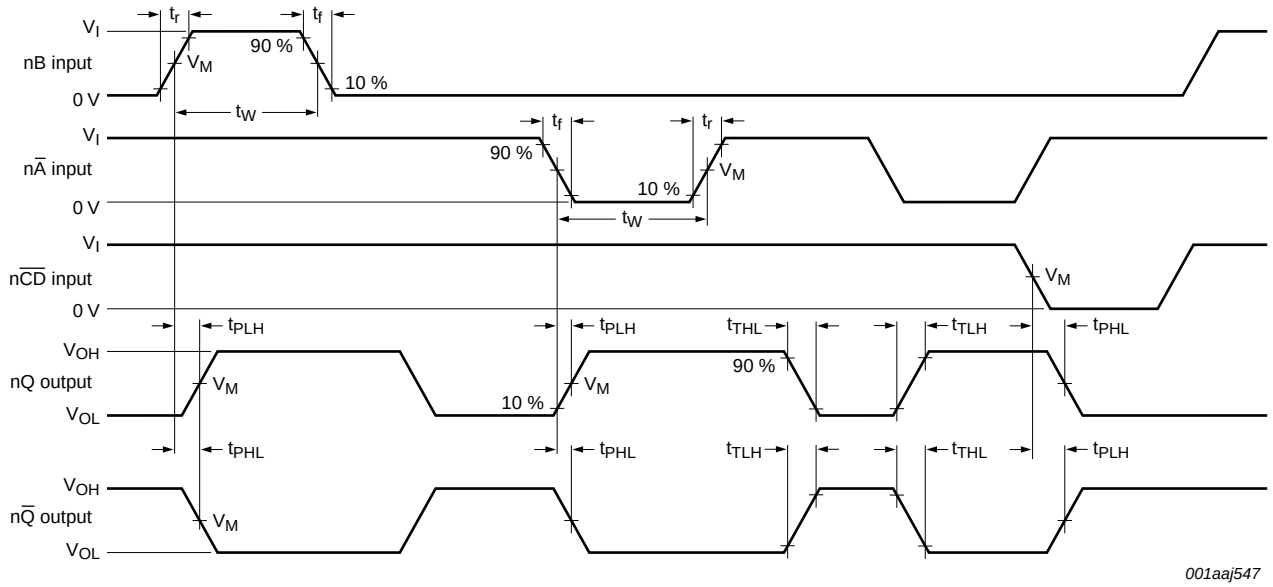

Measurement points are given in Table 9.

Logic levels: V_{OL} and V_{OH} are typical output levels that occur with the output load.

Fig 5. Waveforms showing propagation delays and transition times

Table 9. Measurement points

Supply voltage	Input	Output
V_{DD}	**V_M**	**V_M**
5 V to 15 V	$0.5V_{DD}$	$0.5V_{DD}$

All information provided in this document is subject to legal disclaimers.

© NXP B.V. 2011. All rights reserved.

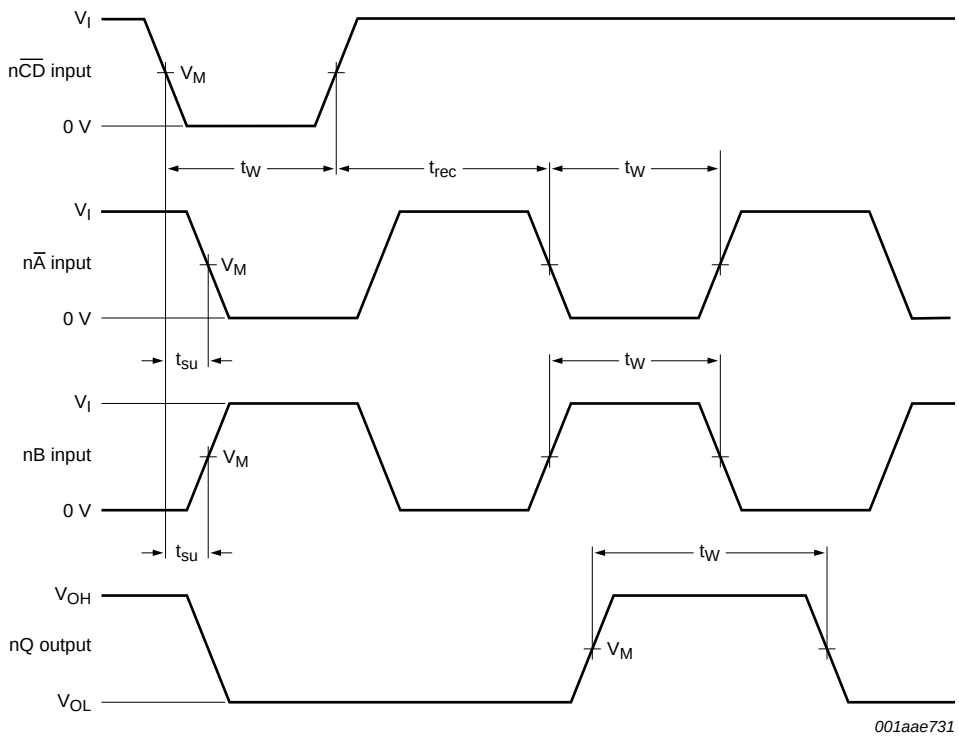

Measurement points are given in Table 9.

Set-up and recovery times are shown as positive values but may be specified as negative values.

Logic levels: V_{OL} and V_{OH} are typical output levels that occur with the output load.

Fig 6. Waveforms showing minimum $n\overline{A}$, nB, and nQ pulse widths and set-up and recovery times

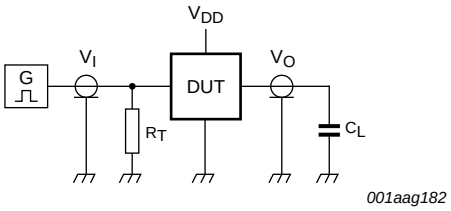

Test data is given in Table 10.

Definitions for test circuit:

DUT = Device Under Test.

C_L = load capacitance including jig and probe capacitance.

R_T = termination resistance should be equal to the output impedance Z_o of the pulse generator.

Fig 7. Test circuit for measuring switching times

Table 10. Test data

Supply voltage	Input		Load
V_{DD}	V_I	t_r, t_f	C_L
5 V to 15 V	V_{SS} or V_{DD}	≤ 20 ns	50 pF

All information provided in this document is subject to legal disclaimers.

© NXP B.V. 2011. All rights reserved.

12. Application information

An example of a HEF4528B application is:

- Non-retriggerable monostable multivibrator

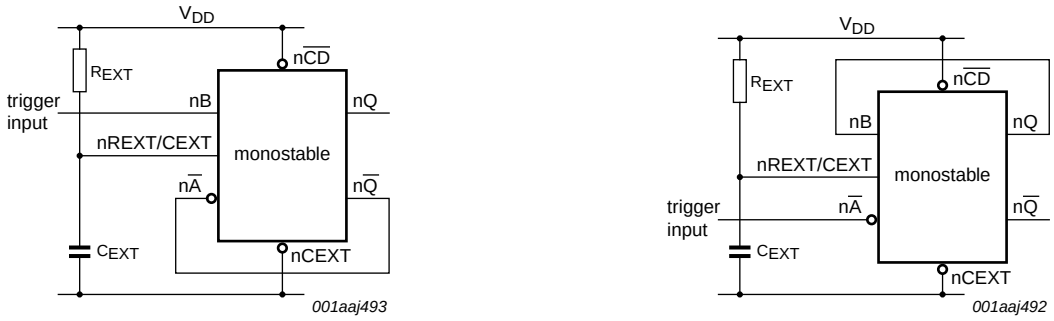

a. Rising edge triggered

b. Falling edge triggered

Fig 8. Non-retriggerable applications

All information provided in this document is subject to legal disclaimers.

© NXP B.V. 2011. All rights reserved.

13. Package outline

DIP16: plastic dual in-line package; 16 leads (300 mil) **SOT38-4**

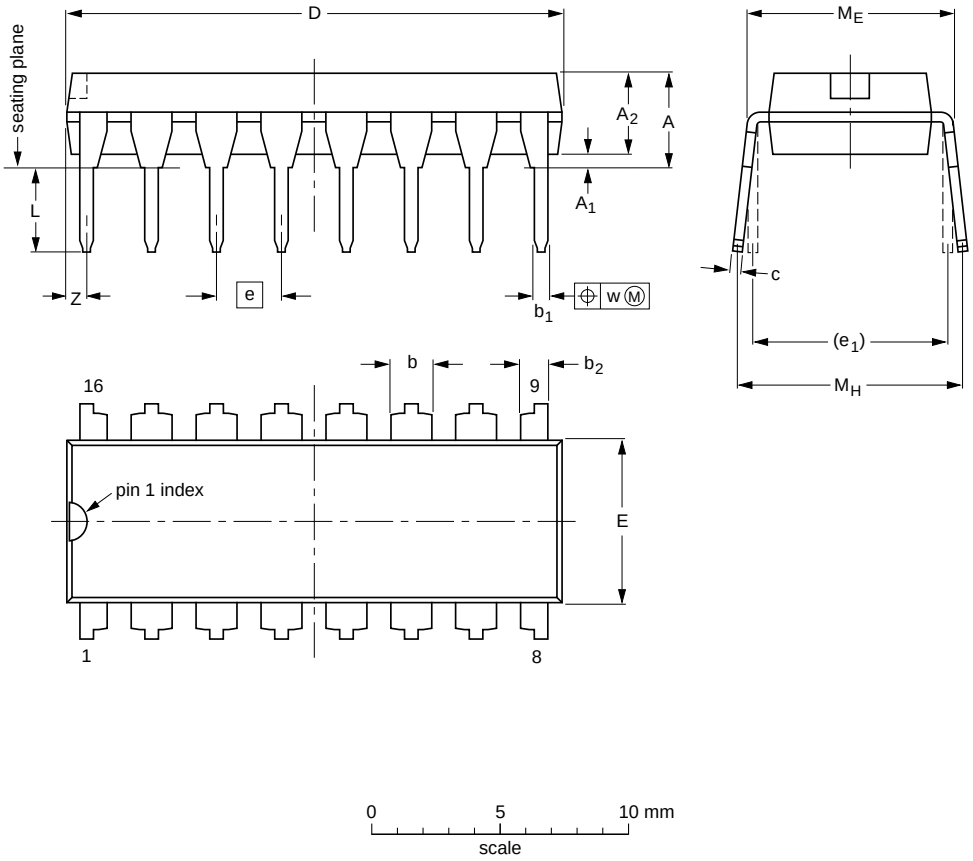

DIMENSIONS (inch dimensions are derived from the original mm dimensions)

UNIT	A max.	A_1 min.	A_2 max.	b	b_1	b_2	c	D (1)	E (1)	e	e_1	L	M_E	M_H	w	Z (1) max.
mm	4.2	0.51	3.2	1.73 1.30	0.53 0.38	1.25 0.85	0.36 0.23	19.50 18.55	6.48 6.20	2.54	7.62	3.60 3.05	8.25 7.80	10.0 8.3	0.254	0.76
inches	0.17	0.02	0.13	0.068 0.051	0.021 0.015	0.049 0.033	0.014 0.009	0.77 0.73	0.26 0.24	0.1	0.3	0.14 0.12	0.32 0.31	0.39 0.33	0.01	0.03

Note

1. Plastic or metal protrusions of 0.25 mm (0.01 inch) maximum per side are not included.

OUTLINE VERSION	REFERENCES				EUROPEAN PROJECTION	ISSUE DATE
	IEC	JEDEC	JEITA			
SOT38-4						~~95-01-14~~ 03-02-13

Fig 9. Package outline SOT38-4 (DIP16)

All information provided in this document is subject to legal disclaimers.

© NXP B.V. 2011. All rights reserved.

SO16: plastic small outline package; 16 leads; body width 3.9 mm **SOT109-1**

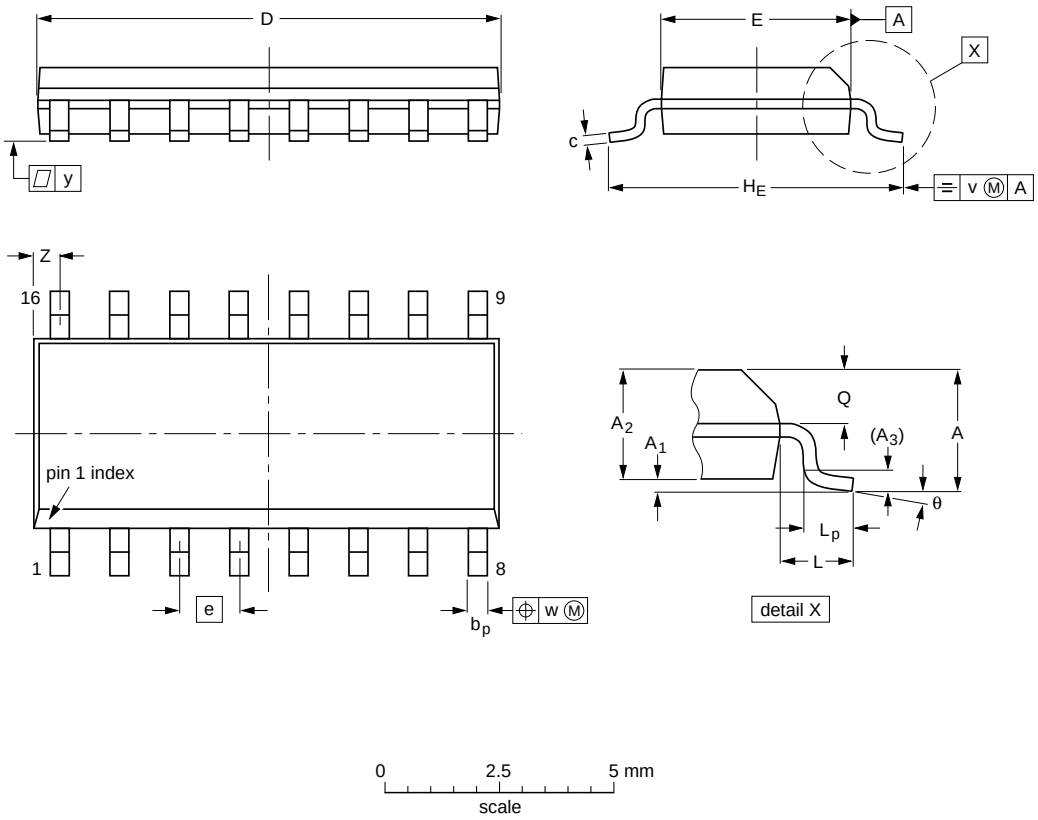

DIMENSIONS (inch dimensions are derived from the original mm dimensions)

UNIT	A max.	A_1	A_2	A_3	b_p	c	D(1)	E(1)	e	H_E	L	L_p	Q	v	w	y	Z(1)	θ
mm	1.75	0.25 0.10	1.45 1.25	0.25	0.49 0.36	0.25 0.19	10.0 9.8	4.0 3.8	1.27	6.2 5.8	1.05	1.0 0.4	0.7 0.6	0.25	0.25	0.1	0.7 0.3	8° 0°
inches	0.069	0.010 0.004	0.057 0.049	0.01	0.019 0.014	0.0100 0.0075	0.39 0.38	0.16 0.15	0.05	0.244 0.228	0.041	0.039 0.016	0.028 0.020	0.01	0.01	0.004	0.028 0.012	

Note

1. Plastic or metal protrusions of 0.15 mm (0.006 inch) maximum per side are not included.

OUTLINE VERSION	REFERENCES				EUROPEAN PROJECTION	ISSUE DATE
	IEC	JEDEC	JEITA			
SOT109-1	076E07	MS-012				~~99-12-27~~ 03-02-19

Fig 10. Package outline SOT109-1 (SO16)

All information provided in this document is subject to legal disclaimers.

© NXP B.V. 2011. All rights reserved.

14. Revision history

Table 11. Revision history

Document ID	Release date	Data sheet status	Change notice	Supersedes
HEF4528B v.7	20111122	Product data sheet	-	HEF4528B v.6
Modifications:	• Section Applications removed • Table 6: I_{OH} minimum values changed to maximum			
HEF4528B v.6	20091127	Product data sheet	-	HEF4528B v.5
HEF4528B v.5	20090813	Product data sheet	-	HEF4528B v.4
HEF4528B v.4	20090209	Product data sheet	-	HEF4528B_CNV v.3
HEF4528B_CNV v.3	19950101	Product specification	-	HEF4528B_CNV v.2
HEF4528B_CNV v.2	19950101	Product specification	-	-

All information provided in this document is subject to legal disclaimers.

© NXP B.V. 2011. All rights reserved.

15. Legal information

15.1 Data sheet status

Document status[1][2]	Product status[3]	Definition
Objective [short] data sheet	Development	This document contains data from the objective specification for product development.
Preliminary [short] data sheet	Qualification	This document contains data from the preliminary specification.
Product [short] data sheet	Production	This document contains the product specification.

[1] Please consult the most recently issued document before initiating or completing a design.

[2] The term 'short data sheet' is explained in section "Definitions".

[3] The product status of device(s) described in this document may have changed since this document was published and may differ in case of multiple devices. The latest product status information is available on the Internet at URL http://www.nxp.com.

15.2 Definitions

Draft — The document is a draft version only. The content is still under internal review and subject to formal approval, which may result in modifications or additions. NXP Semiconductors does not give any representations or warranties as to the accuracy or completeness of information included herein and shall have no liability for the consequences of use of such information.

Short data sheet — A short data sheet is an extract from a full data sheet with the same product type number(s) and title. A short data sheet is intended for quick reference only and should not be relied upon to contain detailed and full information. For detailed and full information see the relevant full data sheet, which is available on request via the local NXP Semiconductors sales office. In case of any inconsistency or conflict with the short data sheet, the full data sheet shall prevail.

Product specification — The information and data provided in a Product data sheet shall define the specification of the product as agreed between NXP Semiconductors and its customer, unless NXP Semiconductors and customer have explicitly agreed otherwise in writing. In no event however, shall an agreement be valid in which the NXP Semiconductors product is deemed to offer functions and qualities beyond those described in the Product data sheet.

15.3 Disclaimers

Limited warranty and liability — Information in this document is believed to be accurate and reliable. However, NXP Semiconductors does not give any representations or warranties, expressed or implied, as to the accuracy or completeness of such information and shall have no liability for the consequences of use of such information.

In no event shall NXP Semiconductors be liable for any indirect, incidental, punitive, special or consequential damages (including - without limitation - lost profits, lost savings, business interruption, costs related to the removal or replacement of any products or rework charges) whether or not such damages are based on tort (including negligence), warranty, breach of contract or any other legal theory.

Notwithstanding any damages that customer might incur for any reason whatsoever, NXP Semiconductors' aggregate and cumulative liability towards customer for the products described herein shall be limited in accordance with the *Terms and conditions of commercial sale* of NXP Semiconductors.

Right to make changes — NXP Semiconductors reserves the right to make changes to information published in this document, including without limitation specifications and product descriptions, at any time and without notice. This document supersedes and replaces all information supplied prior to the publication hereof.

Suitability for use — NXP Semiconductors products are not designed, authorized or warranted to be suitable for use in life support, life-critical or safety-critical systems or equipment, nor in applications where failure or malfunction of an NXP Semiconductors product can reasonably be expected to result in personal injury, death or severe property or environmental damage. NXP Semiconductors accepts no liability for inclusion and/or use of NXP Semiconductors products in such equipment or applications and therefore such inclusion and/or use is at the customer's own risk.

Applications — Applications that are described herein for any of these products are for illustrative purposes only. NXP Semiconductors makes no representation or warranty that such applications will be suitable for the specified use without further testing or modification.

Customers are responsible for the design and operation of their applications and products using NXP Semiconductors products, and NXP Semiconductors accepts no liability for any assistance with applications or customer product design. It is customer's sole responsibility to determine whether the NXP Semiconductors product is suitable and fit for the customer's applications and products planned, as well as for the planned application and use of customer's third party customer(s). Customers should provide appropriate design and operating safeguards to minimize the risks associated with their applications and products.

NXP Semiconductors does not accept any liability related to any default, damage, costs or problem which is based on any weakness or default in the customer's applications or products, or the application or use by customer's third party customer(s). Customer is responsible for doing all necessary testing for the customer's applications and products using NXP Semiconductors products in order to avoid a default of the applications and the products or of the application or use by customer's third party customer(s). NXP does not accept any liability in this respect.

Limiting values — Stress above one or more limiting values (as defined in the Absolute Maximum Ratings System of IEC 60134) will cause permanent damage to the device. Limiting values are stress ratings only and (proper) operation of the device at these or any other conditions above those given in the Recommended operating conditions section (if present) or the Characteristics sections of this document is not warranted. Constant or repeated exposure to limiting values will permanently and irreversibly affect the quality and reliability of the device.

Terms and conditions of commercial sale — NXP Semiconductors products are sold subject to the general terms and conditions of commercial sale, as published at http://www.nxp.com/profile/terms, unless otherwise agreed in a valid written individual agreement. In case an individual agreement is concluded only the terms and conditions of the respective agreement shall apply. NXP Semiconductors hereby expressly objects to applying the customer's general terms and conditions with regard to the purchase of NXP Semiconductors products by customer.

No offer to sell or license — Nothing in this document may be interpreted or construed as an offer to sell products that is open for acceptance or the grant, conveyance or implication of any license under any copyrights, patents or other industrial or intellectual property rights.

Export control — This document as well as the item(s) described herein may be subject to export control regulations. Export might require a prior authorization from competent authorities.

All information provided in this document is subject to legal disclaimers.

© NXP B.V. 2011. All rights reserved.

Non-automotive qualified products — Unless this data sheet expressly states that this specific NXP Semiconductors product is automotive qualified, the product is not suitable for automotive use. It is neither qualified nor tested in accordance with automotive testing or application requirements. NXP Semiconductors accepts no liability for inclusion and/or use of non-automotive qualified products in automotive equipment or applications.

In the event that customer uses the product for design-in and use in automotive applications to automotive specifications and standards, customer (a) shall use the product without NXP Semiconductors' warranty of the product for such automotive applications, use and specifications, and (b) whenever customer uses the product for automotive applications beyond NXP Semiconductors' specifications such use shall be solely at customer's own risk, and (c) customer fully indemnifies NXP Semiconductors for any liability, damages or failed product claims resulting from customer design and use of the product for automotive applications beyond NXP Semiconductors' standard warranty and NXP Semiconductors' product specifications.

15.4 Trademarks

Notice: All referenced brands, product names, service names and trademarks are the property of their respective owners.

16. Contact information

For more information, please visit: **http://www.nxp.com**

For sales office addresses, please send an email to: **salesaddresses@nxp.com**

All information provided in this document is subject to legal disclaimers.

© NXP B.V. 2011. All rights reserved.

17. Contents

1 General description 1
2 Features and benefits 1
3 Ordering information 1
4 Functional diagram 2
5 Pinning information 3
5.1 Pinning 3
5.2 Pin description 3
6 Functional description 4
7 Limiting values 4
8 Recommended operating conditions 5
9 Static characteristics 5
10 Dynamic characteristics 6
11 Waveforms 9
12 Application information 11
13 Package outline 12
14 Revision history 14
15 Legal information 15
15.1 Data sheet status 15
15.2 Definitions 15
15.3 Disclaimers 15
15.4 Trademarks 16
16 Contact information 16
17 Contents 17

Please be aware that important notices concerning this document and the product(s) described herein, have been included in section ‘Legal information’.

© NXP B.V. 2011. All rights reserved.

For more information, please visit: http://www.nxp.com
For sales office addresses, please send an email to: salesaddresses@nxp.com

Date of release: 22 November 2011
Document identifier: HEF4528B