Industrial Power Supplies

TEX Series, 120 Watt

Features

- Rugged power supplies for harsh outdoor environments
- Die-cast aluminium housing
- Dust, water (incl. salt water), ice and oil resistant enclosure
- IP67 and NEMA 4X rated
- Connection via waterproof I/O plug-connectors
- Shock & vibration proof construction
- Operating temp. range –40°C to +85°C
- Universal input 85 to 264 VAC
- Output voltage adjustable
- DC-OK indicator
- Low ripple and noise
- Worldwide safety approvals
- Class I, zone 2 approval incl. ATEX certification
- 3-year product warranty

These power supplies have been designed particularly for applications in extreme environments. The rugged die-cast aluminium housing is water, ice, oil and dust resistant in compliance with IP67 and NEMA 4X standards. The metal case works as an efficient heatsink allowing full power operation at up to +60°C ambient temperature (no fan required). With a shock and vibration proof construction the power supplies can be mounted directly on a machine.
An International safety approval package includes CB scheme as well as ATEX certification and IECEx test report of conformity for applications in hazardous locations i.e in chemical or food processing industries. The TEX series offers a cost efficient solution for de-centralized power systems in industrial automation applications with critical environment conditions.

Models

Order Code	Output Power (max.)	Output Voltage* (nom.)	Output Current (max.)
TEX 120-112	96 W	12 VDC	8.0 A
TEX 120-124	120 W	24 VDC	5.0 A

* adjustable

Input Specifications

Input voltage	– nominal – AC range – DC range	100 – 240 VAC 85 – 264 VAC 85 – 375 VDC (power derating tba.)
Input frequency		47 – 63 Hz
Harmonic limits		EN 61000-3-2, Class A
Input current at full load (typ.)		1.0 A at 230 VAC, 2.0 A at 115 VAC
Recommended circuit breaker (characteristic C or slow blow fuse)		5.0 A

Output Specifications

Output voltage adjustable range	12 VDC model: 24 VDC model:	12 – 15 VDC 24 – 28 VDC
Output regulation (10 to 90% load variation)		2.5 %
Ripple and noise (20MHz bandwidth)		<50 mV pk-pk
Electronic short circuit protection		current limitation at 110 % typ. (automatic recovery)
Output overvoltage protection		<40 V
Hold-up time		>20 ms

General Specifications

Temperature range	– Operating – Rated for ATEX certification – Storage	–40°C to +85°C max. –40°C to +70°C max. –40°C to +85°C max.
Power derating		above 60°C 2.0 %/K
Safety standards	– Information technology equipment – Control equipment for hazardous location – Electrical equip. for potentially explosive atmospheres – Industrial control equipment – Electrical equip. for measurement, control, laboratory – Electrical equipment for machines – Electronic equipment for power installation – Safety transformers	IEC/EN 60950-1 UL File e213613 (Class I, Division 1 & 2, group A, B, C & D, T4) IEC/EN 60079-15 (Class I, Zone 2, EEx nA IIC T4) UL 508, File e210002 IEC/EN 61010-1, C22.2 61010-1-12, UL 61010-1 3rd EN 60204-3 EN 50178 EN 61558-2-8
Safety approvals and certifications	– UL 508 – UL HazLoc – CB test certificate IEC 60950-1 – SIQ certificate EN 60950-1, EN 60204, EN50178 – CB test certificate IEC 61010-1:2010 (3rd-edition) – SIQ certificate EN 61010-1:2010 – CSA certificate UL 61010-1 (3rd-edition) – ATEX, EN 60079-15 – IECEx test report IEC 60079-15	www.tracopower.com/products/tex120-ul508.pdf www.tracopower.com/products/tex120-hazloc.pdf www.tracopower.com/products/tex120-cb.pdf www.tracopower.com/products/tex120-en.pdf www.tracopower.com/products/tex120-cb61010.pdf www.tracopower.com/products/tex120-en61010.pdf www.tracopower.com/products/tex120-csa61010.pdf www.tracopower.com/products/tex120-atex.pdf www.tracopower.com/products/tex120-iecex.pdf
Electromagnetic compatibility (EMC), emissions	– Conducted RI suppression on input – Radiated RI suppression – Harmonic limits	EN 61000-6-3 EN 55022 class B EN 55022 class B EN 61000-3-2, Class A
Electromagnetic compatibility (EMC), immunity	– Electrostatic discharge (ESD) – Radiated RF field immunity – Electrical fast transient / burst immunity input – Electrical fast transient / burst immunity output – Surge immunity line – neutral – Surge immunity line – ground – Surge immunity neutral – ground – Surge immunity output – Immunity to conducted RF disturbances – Mains voltage dips and interruptions	EN 61000-6-2 EN 61000-4-2, 8 kV / 15 kV, perf. criteria A EN 61000-4-3, 10 V/m, perf. criteria A EN 61000-4-4, 4 kV, perf. criteria A EN 61000-4-4, 2 kV, perf. criteria A EN 61000-4-5, 4 kV, perf. criteria A EN 61000-4-5, 2 kV, perf. criteria A EN 61000-4-5, 4 kV, perf. criteria A EN 61000-4-5, 0.5 kV, perf. criteria A EN 61000-4-6, 10 V, perf. criteria A EN 61000-4-11, 30 % /10 mS, criteria B, EN 61000-4-11, 60 % /100 mS, criteria C

All specifications valid at nominal input voltage, full load and +25°C after warm-up time unless otherwise stated.

General Specifications

Safety class		degree of protection class I
Case protection		IP 67 (IEC 60529), NEMA 4X rated, UL 50
	– Degree of protection (IP67)	www.tracopower.com/products/tex120-ip.pdf
	– Water intrusion test	www.tracopower.com/products/tex120-water.pdf
	– Dust test	www.tracopower.com/products/tex120-dust.pdf
	– Icing test	www.tracopower.com/products/tex120-icing.pdf
	– Oil exclusion test	www.tracopower.com/products/tex120-oil.pdf
	– Salt spray test	www.tracopower.com/products/tex120-salt.pdf
	– Gasket aging test	www.tracopower.com/products/tex120-aging.pdf
	– Hosedown test	www.tracopower.com/products/tex120-hose.pdf
Humidity		up to 100 % rel. H with condensation
Reliability (calculated MTBF at +40°C according IEC 61709)		>900'000h
Environment	– Vibration	IEC 60068-2-6, 3 axis, sine sweep, 10–55Hz, 1g, 1 oct/min
	– Shock	IEC 60068-2-27, 3 axis, 15g half sine, 11ms
Environmental compliance	– Reach	www.tracopower.com/products/tex-reach.pdf
	– RoHS	RoHS directive 2011/65/EU
Altitude		3000 m max. (10'000 ft)
Installation instructions		www.tracopower.com/products/tex120-inst.pdf

Case Dimensions

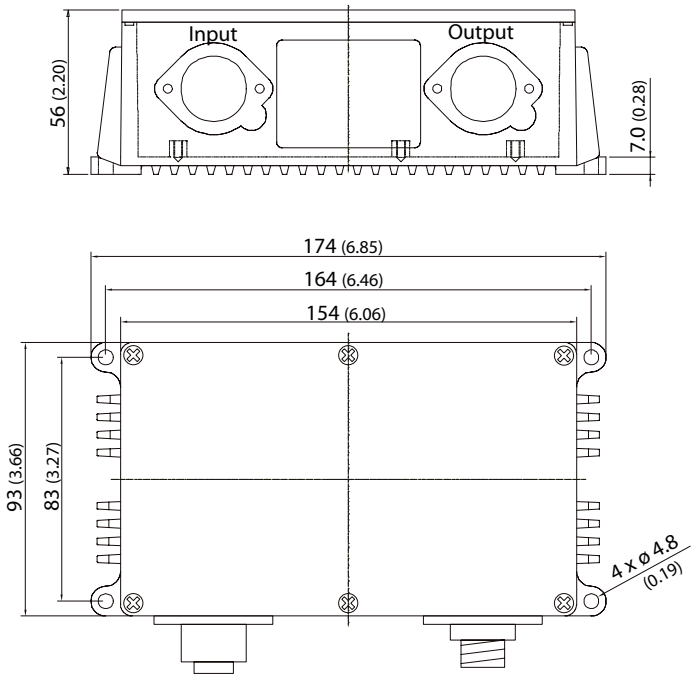

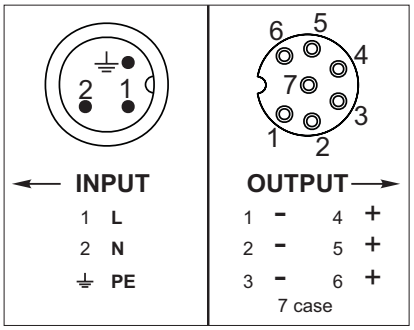

Connectors not included in shipment!
(Units are supplied with sealing connector caps)

Material: die-cast aluminium
Weight: 1000 g (35.3 oz)

Dimensions in [mm], () = Inch
Tolerances: ±0.5 mm (±0.02)

Accessories *

TEX-P11	**AC Input connector: Binder 3-pin female circular plug 99-4222-14-04**
TEX-P21	**DC Output connector: Binder: 7-pin male circular plug 99-4225-160-07**
TEX-C11	**TEX-IP-ASSY Input cable assembly 2m,** (wire to pin reference comes with cable)
TEX-C21	**TEX-OP-ASSY Output cable assembly 2m,** (wire to pin reference comes with cable)

* Units delivered before mid 2010 are equipped with Amphenol sockets see: www.tracopower.com/products/tex120-amphenol.pdf