CUSTOMER DRAWING

P/N: 165 10 002 REV C

NOTE:
1. ACTUATION FORCE TO BE 450 GRAMS.

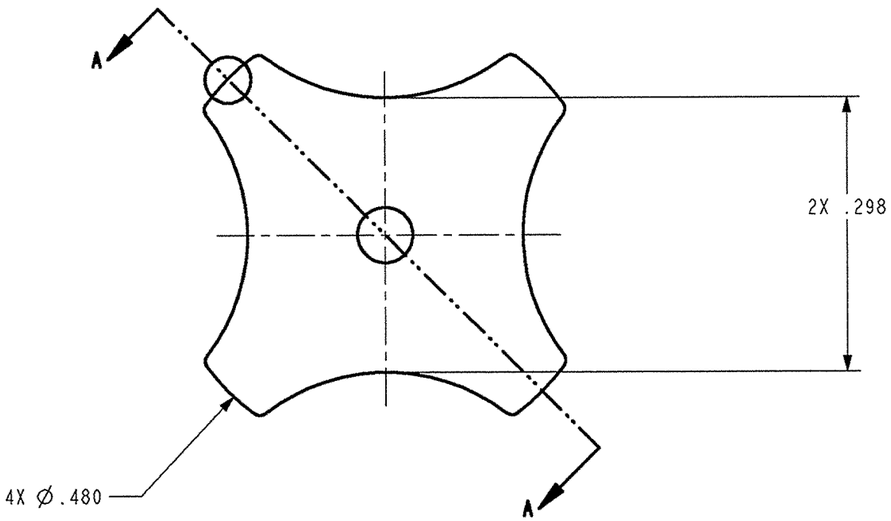

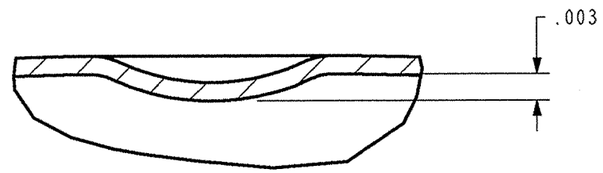

DETAIL A
SCALE 30

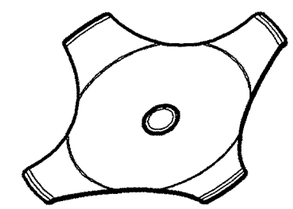

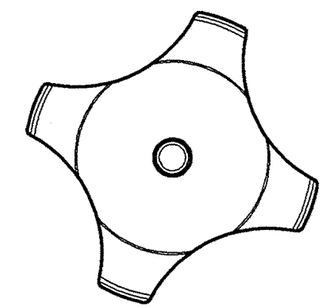

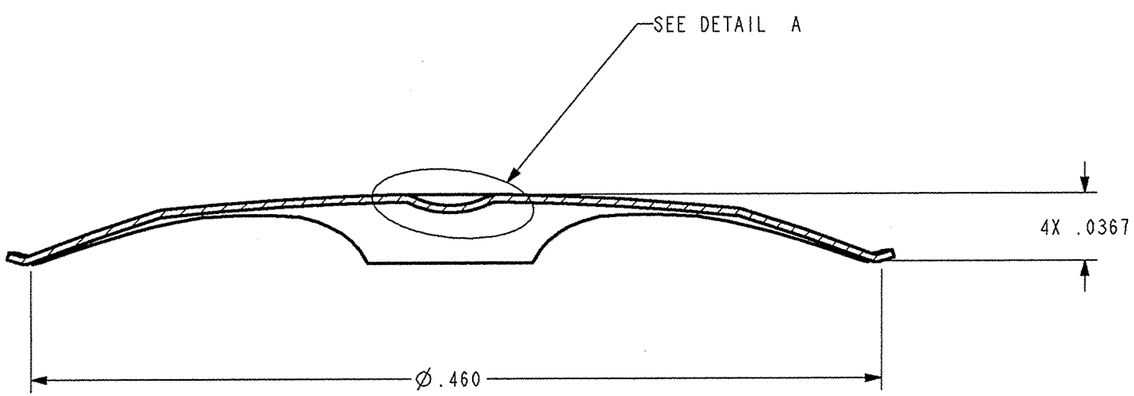

SECTION A-A
SCALE 12

ARK-LES
UNCONTROLLED

REV.	DESCRIPTION	DATE	DR.
C	UPDATE DOC. PER ECR #12487	3-28-03	J.K.

PRINT DIST.	
DEPT	#
ENG	1
SALES	
STO	8
RAL	
JZ	
CHINA	

PROD. REL.	ECR#12167	5-24-01	CHK'D RWT 4-1-03
QUOTE REL.			
DRAWN BY J.KHALARIAN 5-17-01			APP.
SUPERSEDES DWG. DATED:			EJ 4.3.03
SCALE 6X	DO NOT SCALE PRINT		
MATERIAL: .004±.0002 THICK, STAINLESS STEEL			
FINISH: NONE			

TOLERANCES UNLESS OTHERWISE SPECIFIED
DECIMALS ±.010
METRIC ±0.25mm
ANGLES ±1°
3RD ANGLE PROJECTION

Ark-Les CORPORATION STOUGHTON, MA

ORIGINAL IF RED

PART NAME CONTACT DOME

CAD#: 16510002

P/N: 165 10 002 REV C