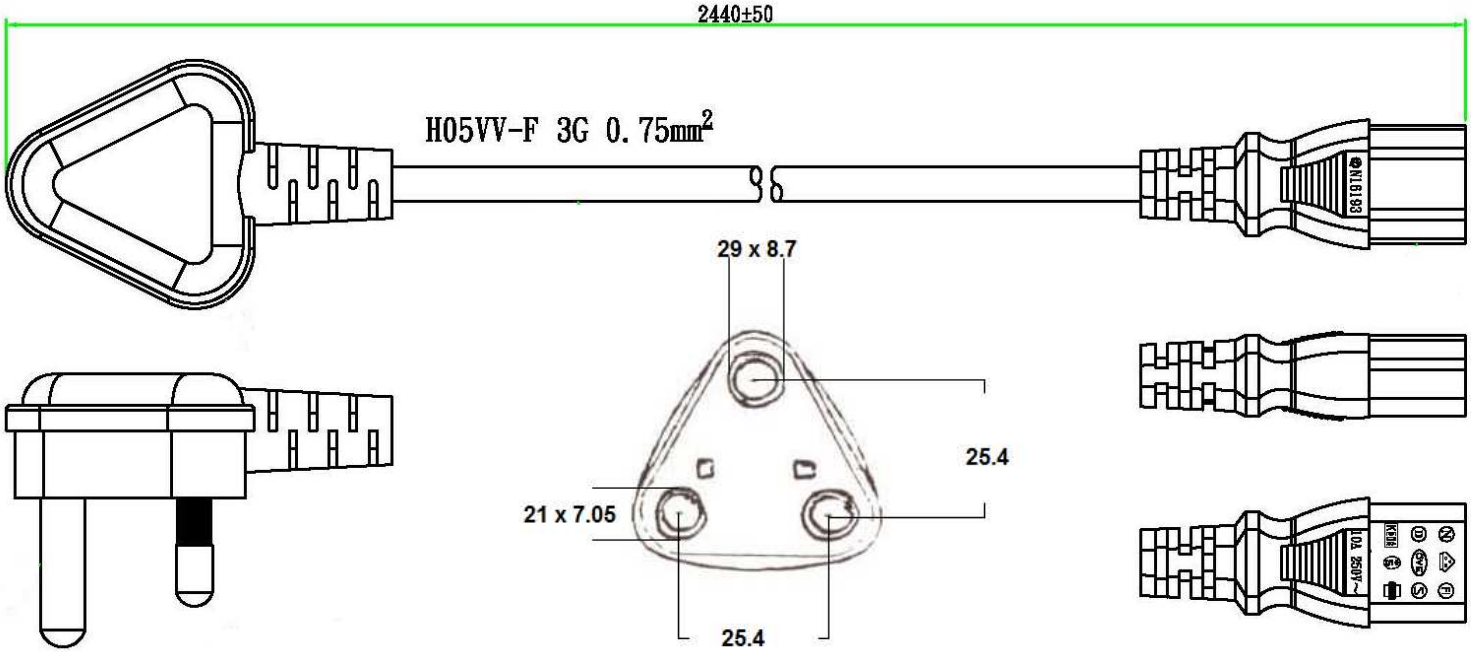

PLUG: BS 546 INDIAN/OLD BRITISH

OUTLET: IEC-320-C13

LENGTH: 8FT

WIRE TYPE: H05VV-F 3G 0.75MM

JACKET: BLACK

RATING: 10A/250V

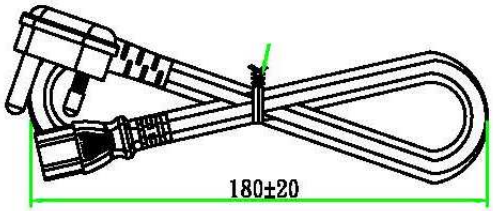

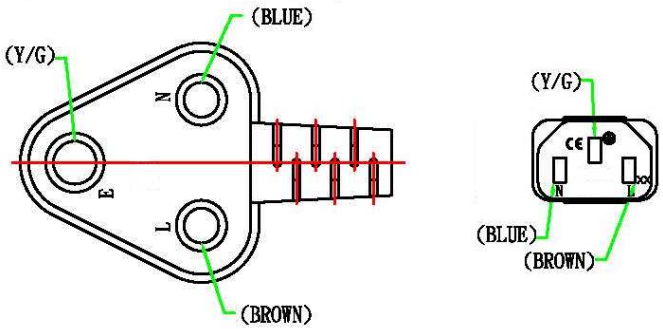

APPROVALS:

REV	DESCRIPTION	DATE	BY
A			
B			

PART NUMBER	IEC-IND CORDSET
DATE	03.29.13
APPROVAL	CB
UNIT	mm
REV	ø

PART TITLE: Indian/ South African Power Cord (3 conductor) RoHS

CONDOR ELECTRONICS, INC.
T: 408-745-7141 F: 408-745-0439
780 Montague Expy. Ste. 406
San Jose, CA 95131 USA
sales@condorelectronics.net

©2013 Condor Electronics, Inc.