Customer Information Sheet

DRAWING No.: M80-667XXXX	SHEET 2 OF 2	IF IN DOUBT - ASK	©	NOT TO SCALE	THIRD ANGLE PROJECTION	ALL DIMENSIONS IN mm

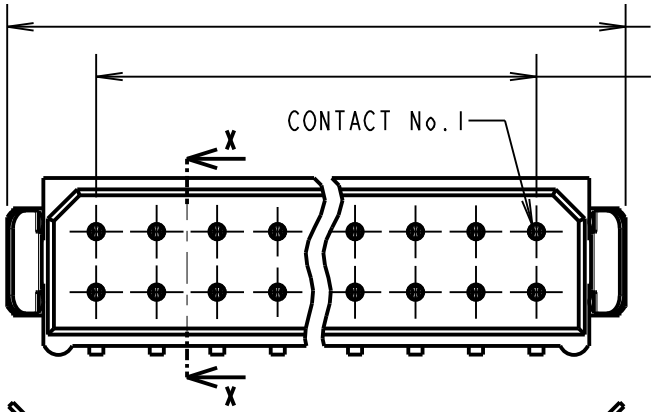

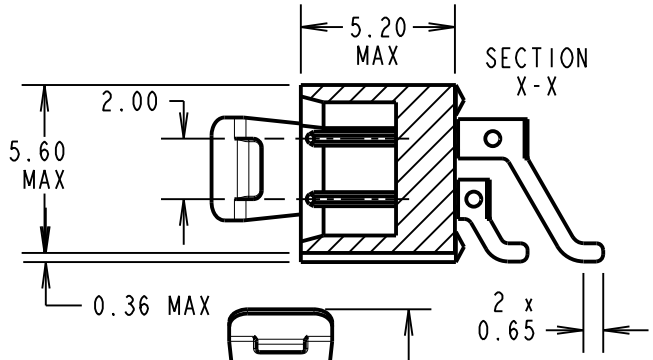

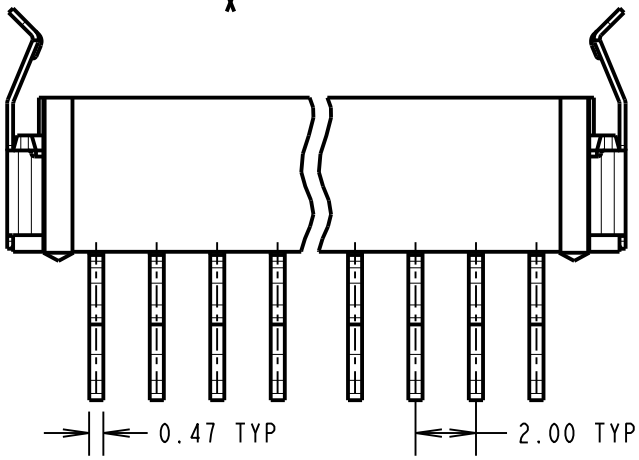

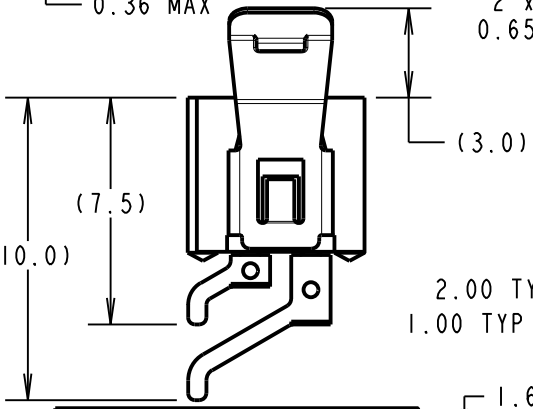

SPECIFICATIONS:
- MATERIAL:
  - MOULDING = GLASS-FILLED POLYAMIDE 46, UL94V-0, BLACK
  - CONTACT = BRASS
  - LATCH = BERYLLIUM COPPER
- FINISH:
  - CONTACT:
    - 22 = 0.75µ GOLD ON CONTACT AREA, 0.3µ 90/10 TIN/LEAD ON TAILS
    - 42 = 0.75µ GOLD ON CONTACT AREA, 0.3µ 100% TIN ON TAILS
    - 45 = 0.75µ GOLD OVER NICKEL
  - LATCH = 1.25µ NICKEL
- ELECTRICAL:
  - CURRENT RATING AT 25°C = 3.0A MAX
  - CURRENT RATING AT 85°C = 2.2A MAX
  - WORKING VOLTAGE = 800V AC/DC
  - VOLTAGE PROOF = 1200V AC/DC
  - CONTACT RESISTANCE = 25 mΩ MAX
  - INSULATION RESISTANCE = 100 MΩ MIN
- MECHANICAL:
  - DURABILITY = 500 OPERATIONS
- ENVIRONMENTAL:
  - TEMPERATURE RANGE = -55°C TO +125°C
- PACKING:
  - TUBE, 2-OFF STRAIN RELIEF STRAPS PER CONNECTOR IN BAG

FOR COMPLETE SPECIFICATION, SEE COMPONENT SPECIFICATION C005XX (LATEST ISSUE)

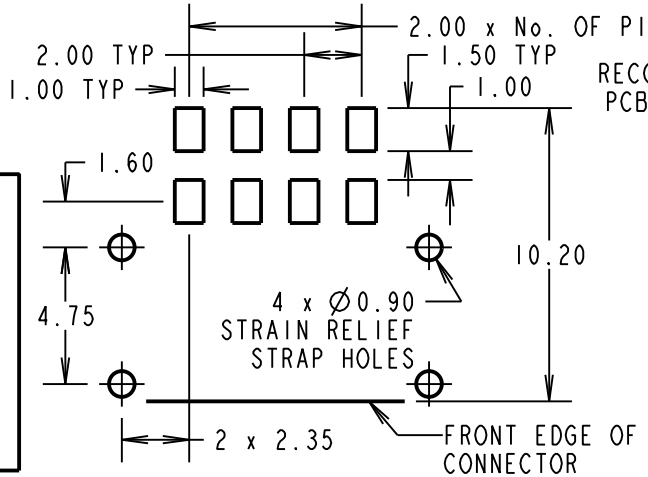

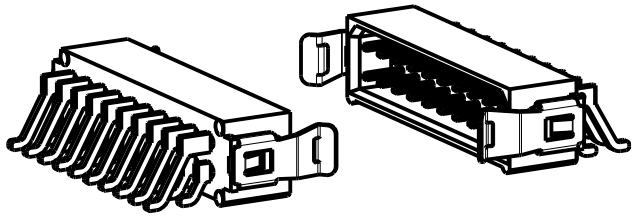

ORDER CODE:

M80-667XXXX

No. OF CONTACTS
04, 06, 08, 10, 12, 14, 16, 18, 20, 26, 34, 44

FINISH
- 22 - GOLD, 90/10 TIN/LEAD
- 42 - GOLD, 100% TIN
- 45 - ALL OVER GOLD

SB	4	12.03.12	11682
NAME	ISS.	DATE	C/NOTE

APPROVED:	S.BENNETT
CHECKED:	M.G.PLESTED
DRAWN:	B. M. KENT
CUSTOMER REF.:	
ASSEMBLY DRG:	

HARWIN

www.harwin.com
technical@harwin.com

THIS DRAWING AND ANY INFORMATION OR DESCRIPTIVE MATTER SET OUT HEREON ARE CONFIDENTIAL AND COPYRIGHT PROPERTY OF THE HARWIN GROUP AND MUST NOT BE DISCLOSED, LOANED, COPIED OR USED FOR MANUFACTURING, TENDERING OR FOR ANY OTHER PURPOSE WITHOUT THEIR WRITTEN PERMISSION.

TOLERANCES
X. = ±1mm
X.X = ±0.25mm
X.XX = ±0.10mm
X.XXX = ±0.01mm
ANGLES = ±5°
UNLESS STATED

MATERIAL: SEE ABOVE

FINISH: SEE ABOVE

S/AREA: mm²

TITLE: STANDARD DATAMATE DIL HORIZONTAL SMT MALE ASSEMBLY (FRICTION LATCHE)

DRAWING NUMBER: M80-667XXXX

SHT 2 OF 2