Plugs for pluggable terminal blocks ／ EC & ESD series

EC880HVT

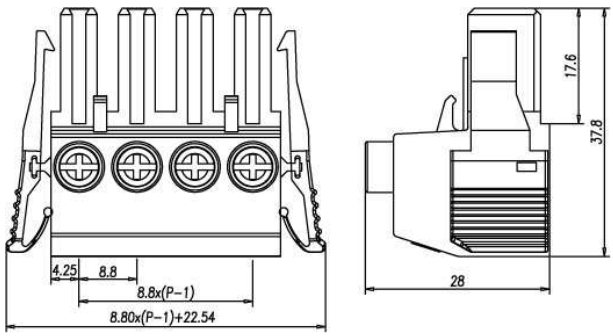

Pitch: 8.08mm

Approval		
Technical Data	UL	IEC
Rated voltage	600V	750V
Rated current	65A	57A
Conductor cross-section, solid (AWG/ mm^2)	20~6 / 0.5~1.0	
Conductor cross-section, flexble (AWG/ mm2)	20~6 / 0.5~1.0	
Rated surge voltage (UL/IEC/Max.)	2.2 / 3.5 / 5 KV	
Torque (N-m)	1.80	
Screw	M4	
Wire strip length	8~9mm	

Pole	Cat. No.
02	EC880HVT-02P
:	:
:	:
12	EC880MVT-12P

TEL: +886-2-2908-0614 FAX: +886-2-2908-8549 E-mail: info@dinkle.com.tw

Copyright DINKLE ENTERPRISE CO., LTD. All Right Reserved.