PNP Silicon Extremely High Voltage Darlington Transistor CZT2000

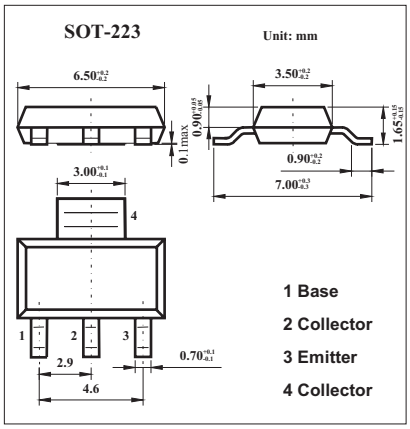

■ Features

●

■ Absolute Maximum Ratings Ta = 25℃

Parameter	Symbol	Rating	Unit
Collector-Base Voltage	V_{CBO}	200	V
Collector-Emitter Voltage	V_{CEO}	200	V
Emitter-Base Voltage	V_{EBO}	10	V
Collector Current	I_C	600	mA
Power Dissipation	P_D	2	W
Operating and Storage Junction Temperature	T_J,T_{stg}	-65 to 150	℃
Thermal Resistance	Θ_{JA}	62.5	℃/W

■ Electrical Characteristics Ta = 25℃

Symbol	Testconditons	Min	Max	Unit
I_{CBO}	V_{CB}=180V		500	nA
I_{EBO}	V_{BE}=10V		100	nA
B_{VCES}	I_C=1.0mA	200		V
$V_{CE(SAT)}$	I_C=20mA, I_B=25μA		0.9	V
$V_{CE(SAT)}$	I_C=80mA, I_B=40μA		1.1	V
$V_{CE(SAT)}$	I_C=160mA, I_B=100μA		1.2	V
$V_{BE(ON)}$	V_{CE}=5.0V, I_C=160mA		2.0	V
h_{FE}	V_{CE}=5.0V, I_C=100μA	3,000		
	V_{CE}=5.0V, I_C=10mA	3,000		
	V_{CE}=5.0V, I_C=160mA	3,000		