SERPAC 17-S
Electronics Enclosures

NOTES:
1. WHEN MACHINE OR I PLATES MODIFICATIONS ARE REQUIRED, USE THE CENTER OF THE ENCLOSURE TO DIMENSION.

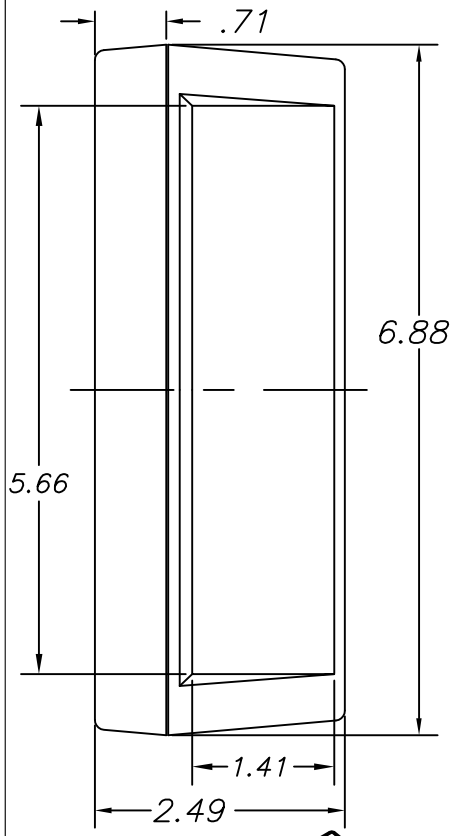

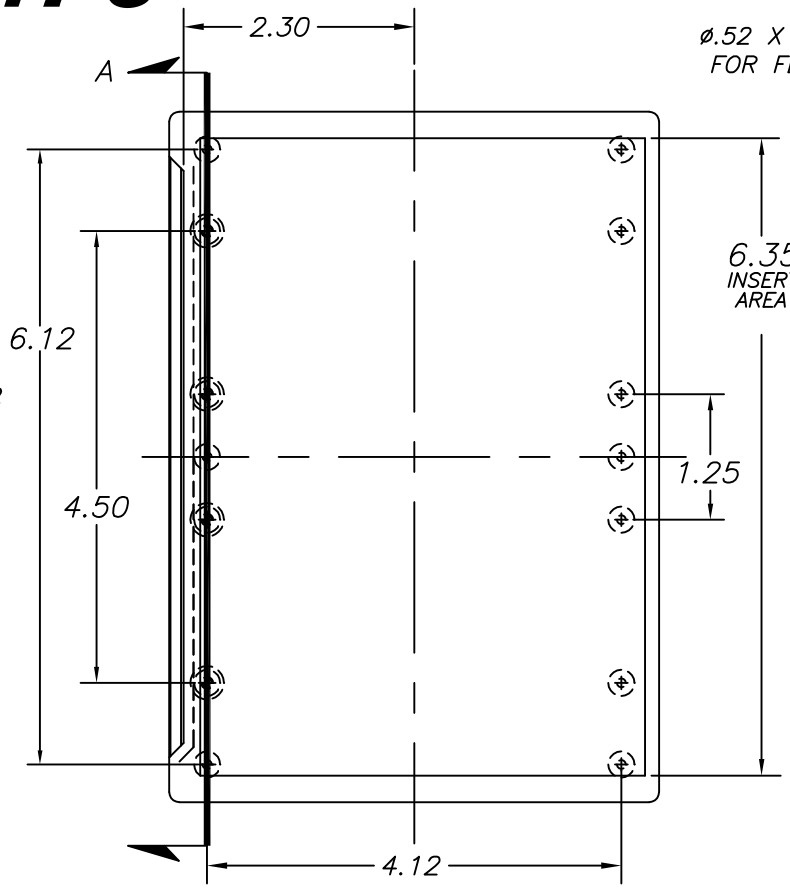

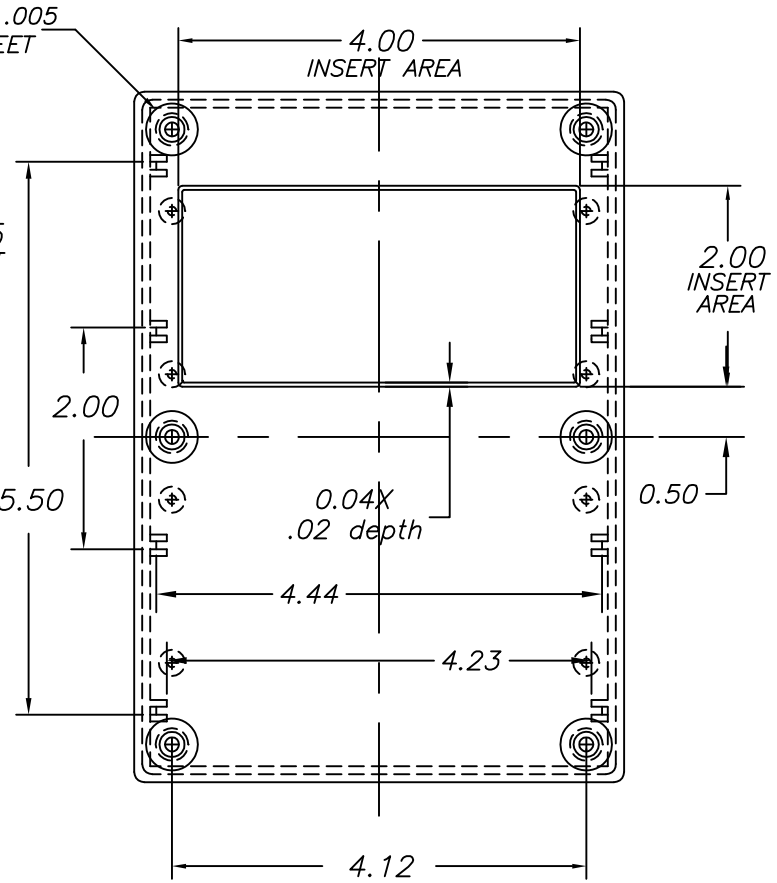

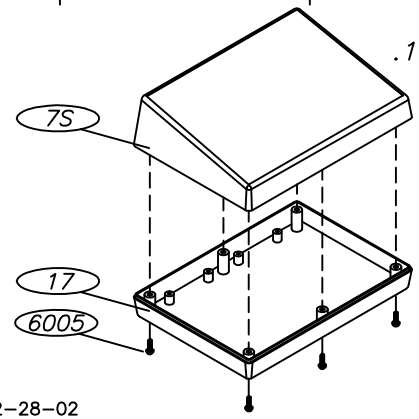

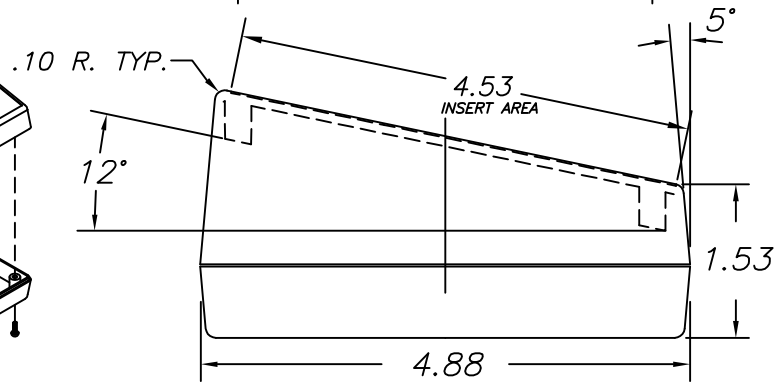

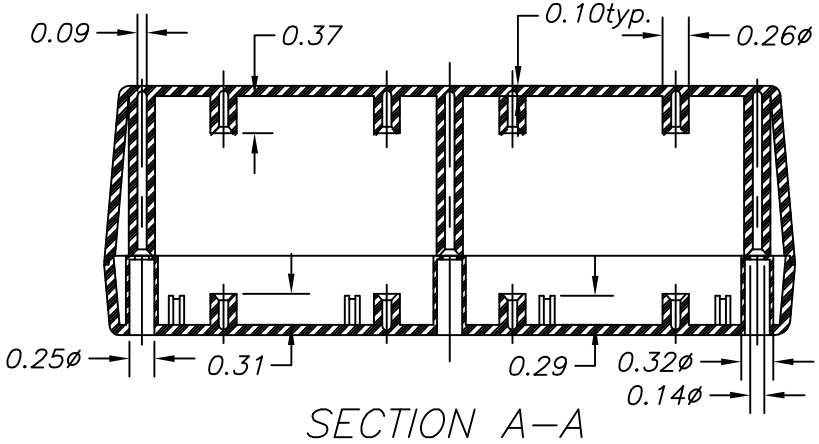

02–28–02

ALL DIMENSIONS ± .010

PART NO.	DESCRIPTION	ACCESSORIES	
7S	PLASTIC TOP	PART NO.	DESCRIPTION
17	PLASTIC BOTTOM		
6005	SCREWS (6)	51	FEET
		370	PROTOTYPE GRID BOARD (HORIZ.)
		470	PROTOTYPE CLAD BOARD (HORIZ.)

619 Commercial Ave. Covina, CA 91723
(626) 331-0517 Fax (626) 331-8584 http://www.serpac.com.