DWG. NO.	HH-3640
ISSUE	REVISIONS

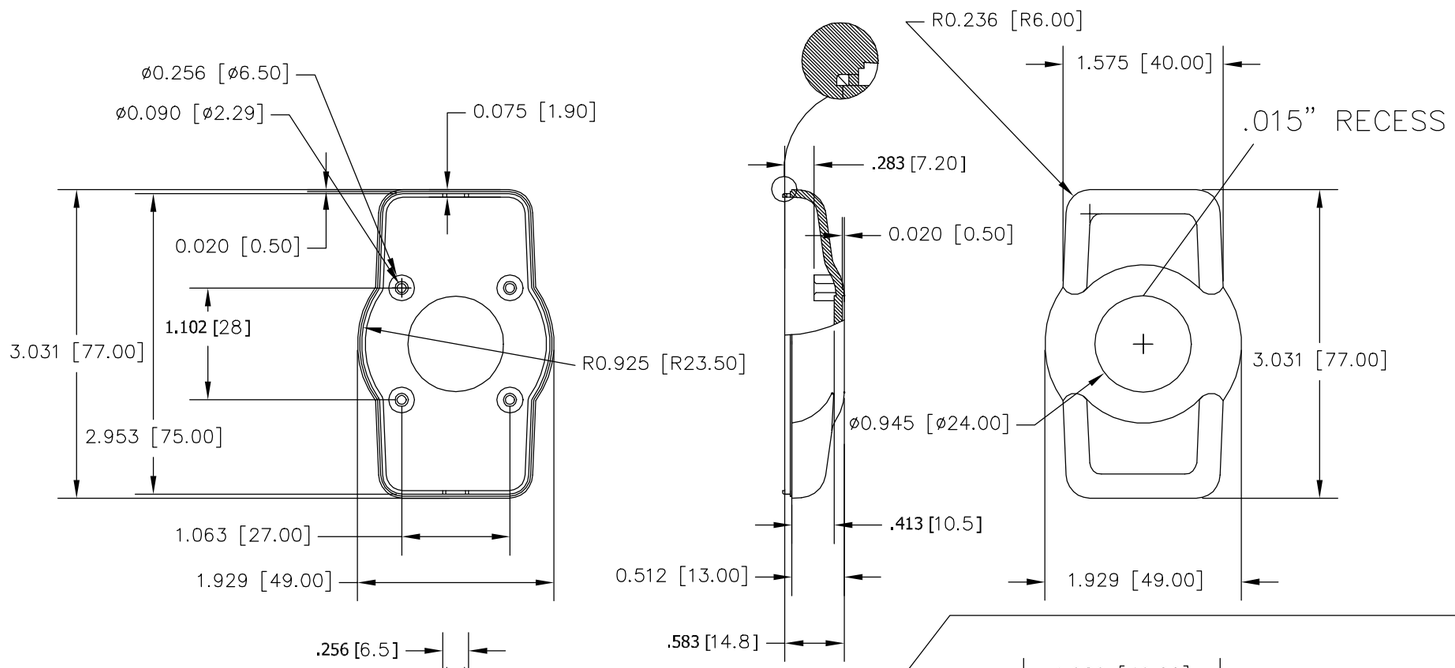

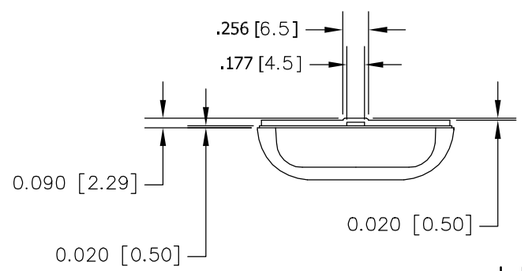

LID

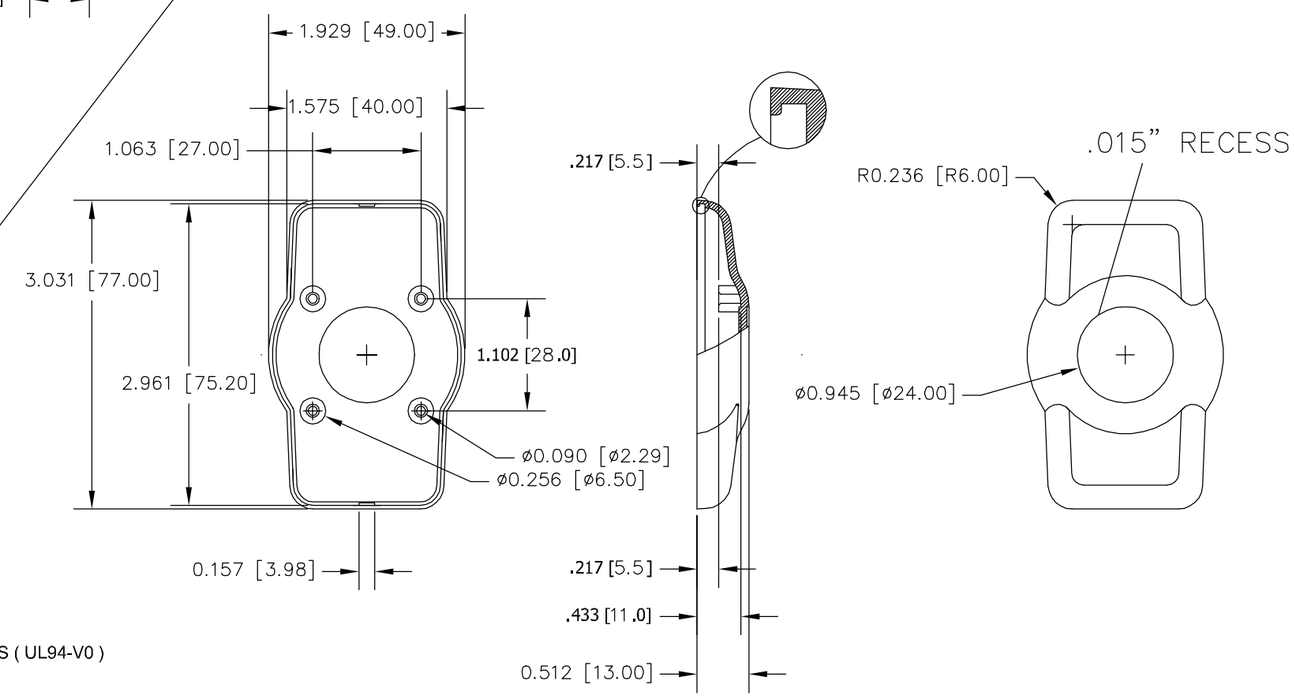

BASE

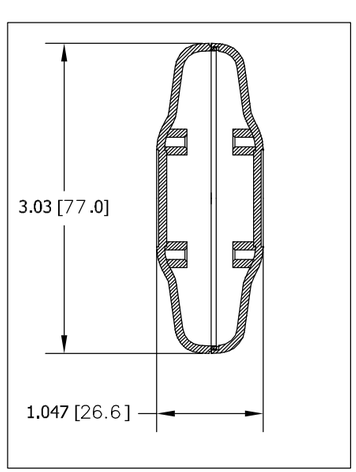

MATERIAL : FLAME RETARDANT OF ABS (UL94-V0)
COLOR: BLACK
FINISH:
SHELL EXTERIOR SURFACES ARE TEXTURED.
RECESSED AREAS ON EXTERIOR ARE SMOOTH.
FOUR (4) INTERNAL BOSSES ON BASE & LID ARE AVAILABLE FOR PCB ASSEMBLY. USE M2.5 OR #4 STD SHEET METAL SCREWS.
ALL DIMENSIONAL TOLERANCES ARE +/-.015

QTY.	USED ON

TOLERANCES:
±.005 BETWEEN HOLE CENTERS
±.015 FROM SHEARED EDGE
±.032 FROM A BENT SURFACE
±.063 BETWEEN ASSEMBLED SURFACES
UNLESS OTHERWISE SPECIFIED

ITEM	REQ'D.	PART NO.	DESCRIPTION
MAT:	SEE NOTE	SCALE:	NAME: HAND-HELD BOX STYLE Q 3.03 X 1.93 X 1.05
FINISH:	BLACK	BUD INDUSTRIES, INC. WILLOUGHBY, OHIO	
DR. RD	10-10-08		
CH.			DWG. NO. HH-3640
APP.			