PART NAME	PLASTIBOX (STYLE B)	PART No.	PS-11290

MATERIAL: HIGH-IMPACT ABS
COLOR: BLACK OR GRAY
FINISH: TEXTURED BODY WITH SMOOTH TOP INSERT

TWO (2) #4 x 0.250" LG. SCREWS AND TWO (2) #4 x 0.375" LG. SCREWS SUPPLIED FOR ASSEMBLING TOP.

FOUR (4) NON-SKID STICK-ON FEET SUPPLIED.

*-USABLE AREA ON COVER ALSO AVAILABLE FOR CUSTOM MOLDING.

NOTE: ALL DIMENSIONS HAVE ±0.015 TOLERANCE UNLESS OTHERWISE SPECIFIED.

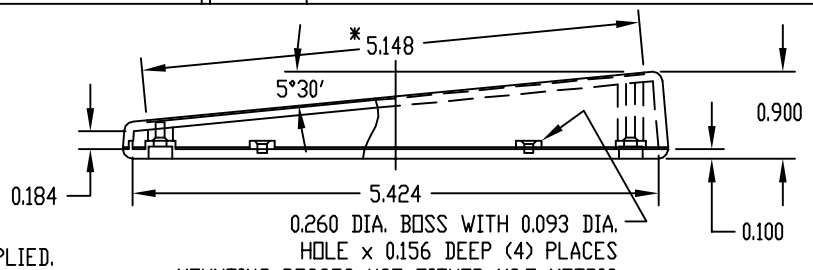

0.260 DIA. BOSS WITH 0.093 DIA. HOLE x 0.156 DEEP (4) PLACES MOUNTING BOSSES USE EITHER M2.5 METRIC OR #4 STD. SHEET METAL SCREWS x 0.188" LG. (NOT SUPPLIED)

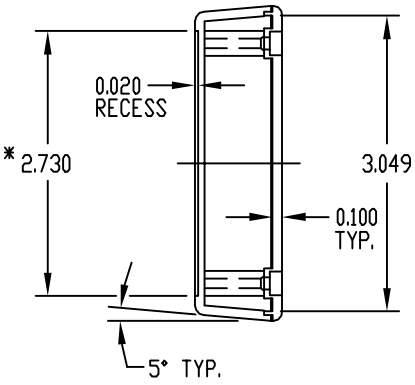

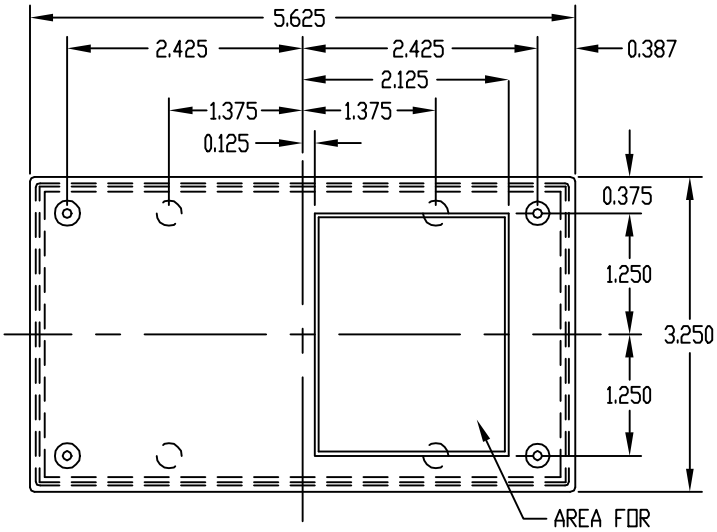

PART NAME	PLASTIBOX (STYLE B)	PART No.	PS-11292

MATERIAL: HIGH-IMPACT ABS
COLOR: BLACK OR GRAY
FINISH: TEXTURED BODY WITH SMOOTH TOP INSERT

TWO (2) #4 x 0.250" LG. SCREWS AND TWO (2) #4 x 0.375" LG. SCREWS SUPPLIED FOR ASSEMBLING TOP.

FOUR (4) NON-SKID PUSH-ON FEET SUPPLIED

*-USABLE AREA ON COVER ALSO AVAILABLE FOR CUSTOM MOLDING.

NOTE: ALL DIMENSIONS HAVE ±0.015 TOLERANCE UNLESS OTHERWISE SPECIFIED.

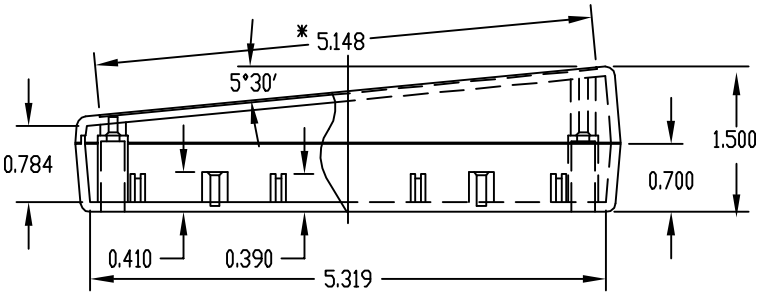

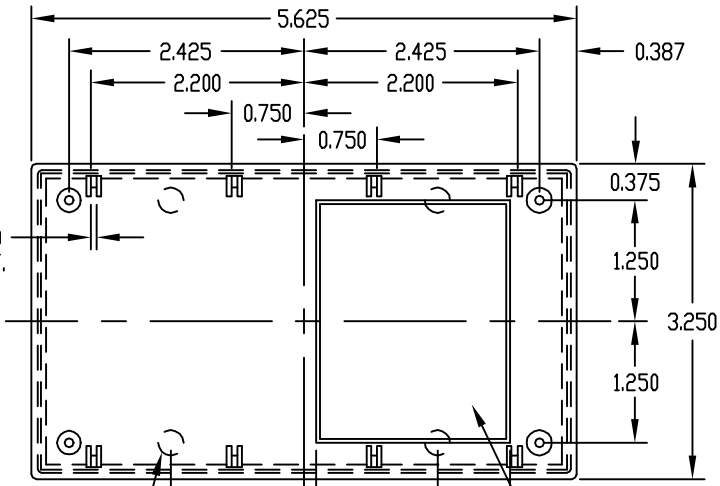

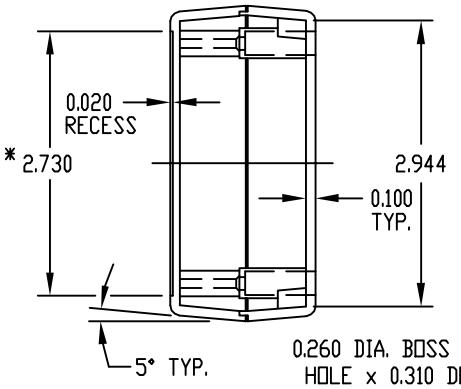

0.260 DIA. BOSS WITH 0.093 DIA. HOLE x 0.310 DEEP (4) PLACES MOUNTING BOSSES USE EITHER M2.5 METRIC OR #4 STD. SHEET METAL SCREWS x 0.250" LG. (NOT SUPPLIED)