PART NAME	NEMA 4X DIE-CAST ALUMINUM BOX w/MTG. BRKTS.	PART No.	AN-2854 & AN-2854-B	REVISION DATE	11-15-11

MATERIAL: ALUMINUM ALLOY #ADC-12

FINISH: NATURAL (NO SUFFIX)
SMOOTH BLACK (SUFFIX -B)

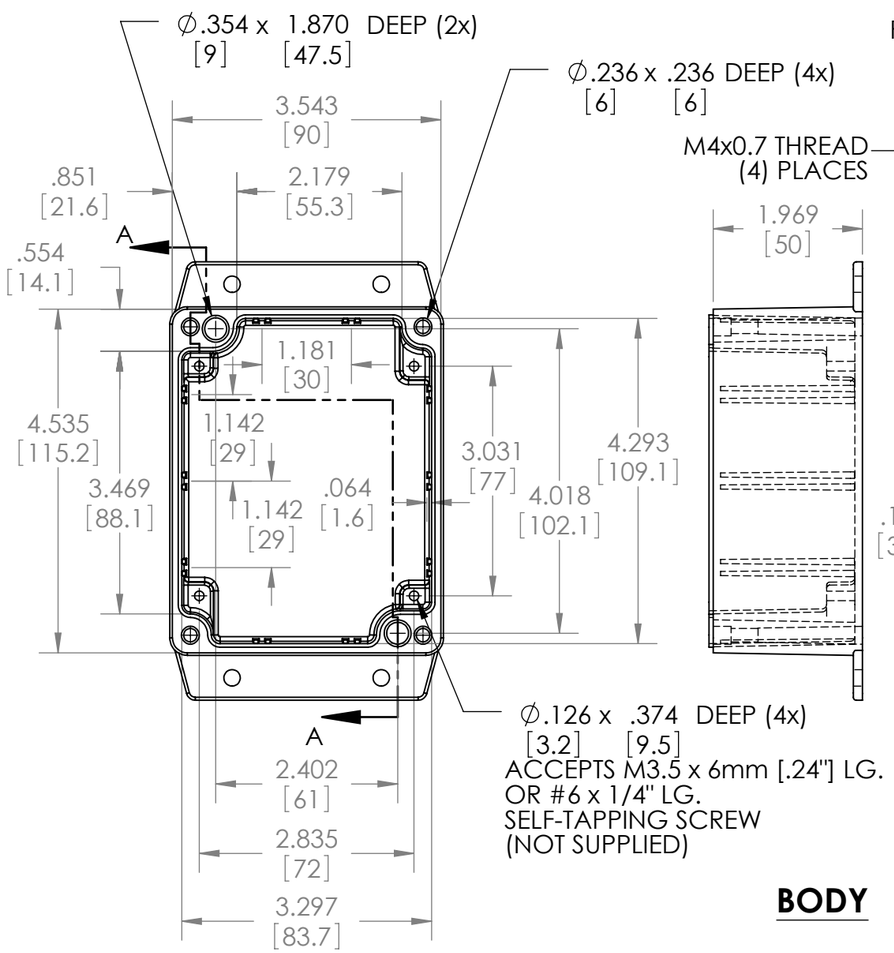

BODY

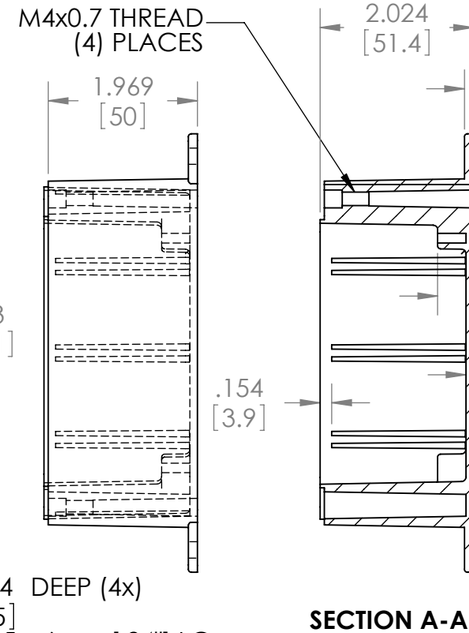

SECTION A-A

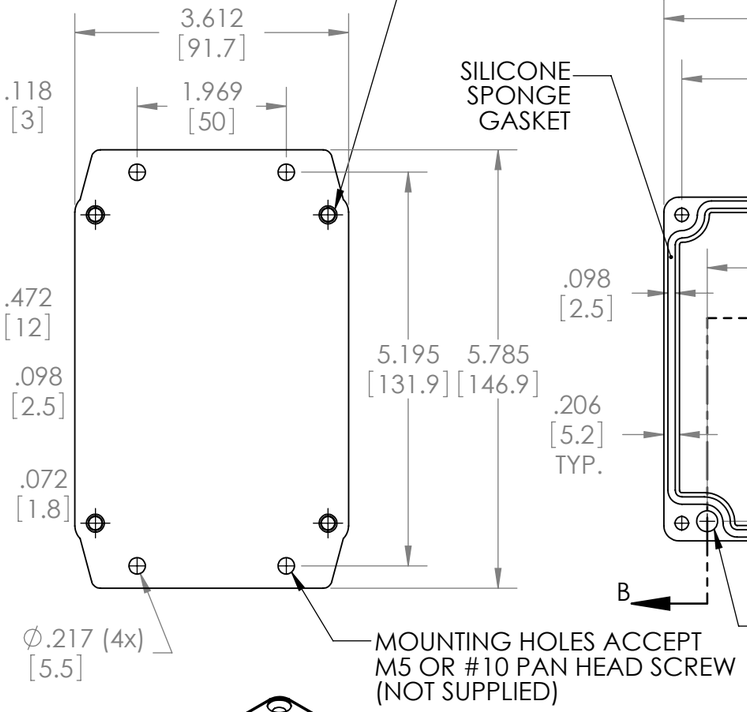

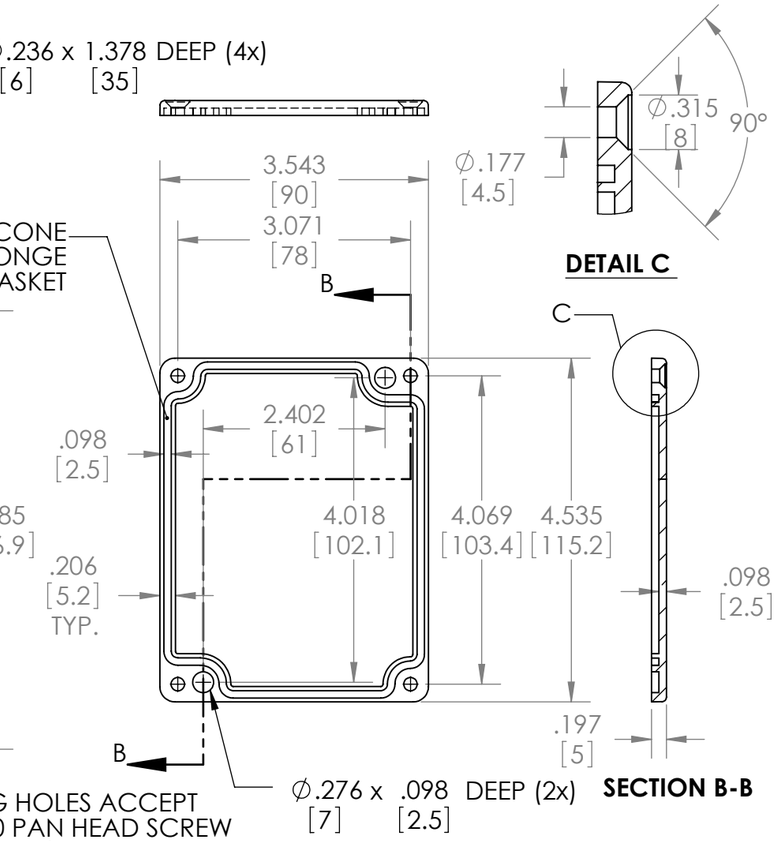

COVER

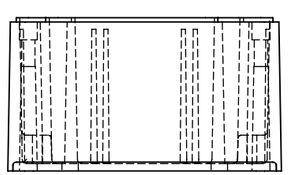

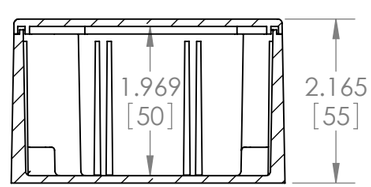

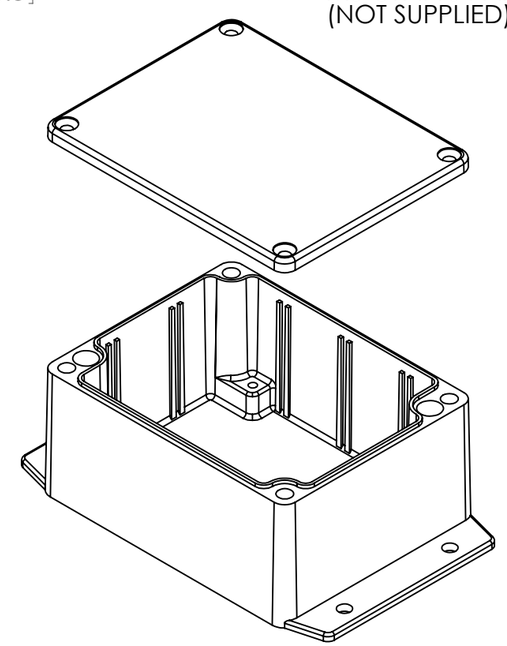

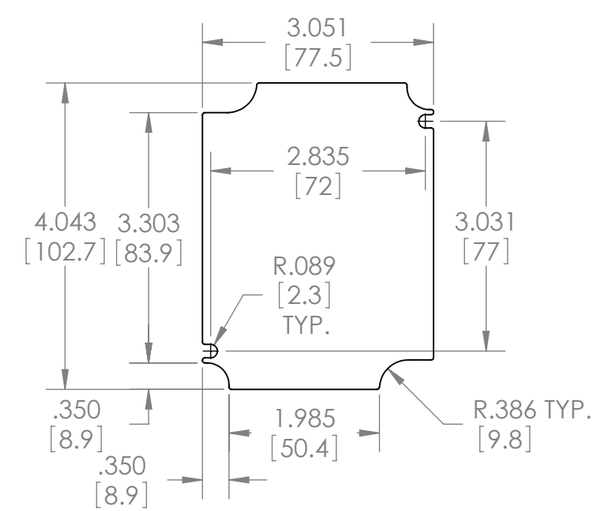

SUGGESTED PC BOARD LAYOUT

NOTES:
1.) FOUR (4) M4x0.7 x 20mm (.79") LG. CSK. HEAD STAINLESS STEEL SCREWS SUPPLIED FOR ASSEMBLY OF COVER TO BODY.
2.) ALL HOLE DIAMETERS HAVE ±.005[±.13] TOLERANCE
ALL OTHER DIMENSIONS HAVE ±.015[±.38] TOLERANCE
3.) ALL OUTSIDE AND INSIDE DRAFT ANGLE: 1°