| BUD | PART NAME | NEMA DIE CAST BOX WITH EMI/RFI SHIELDING | PART No. | ANS-3805 ANS-3805-B | REVISION DATE | 8-22-13 |
|---|---|---|---|---|---|---|

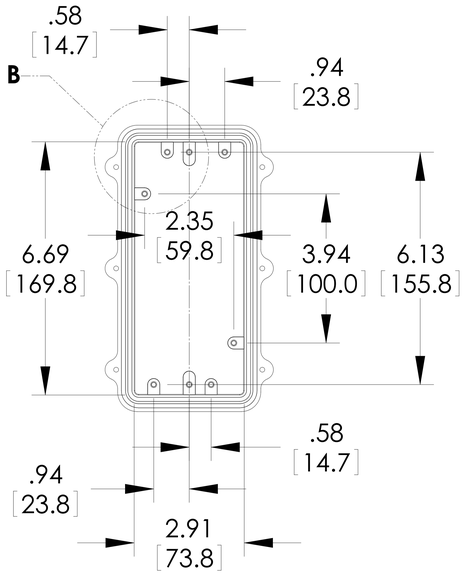


**INSIDE BODY DETAILS**

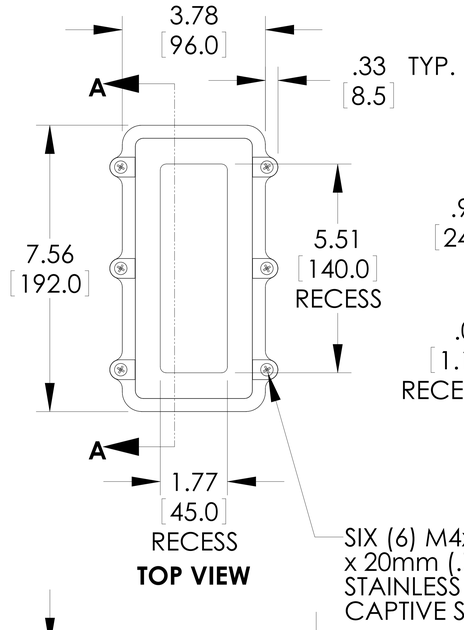


**TOP VIEW**

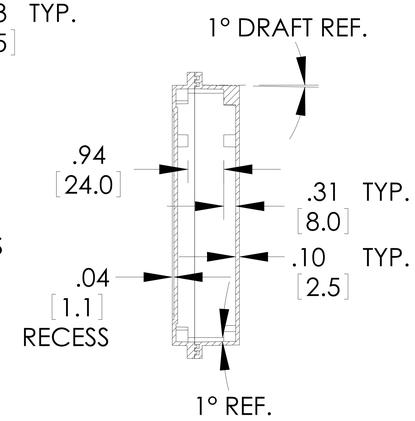


**SECTION A-A**

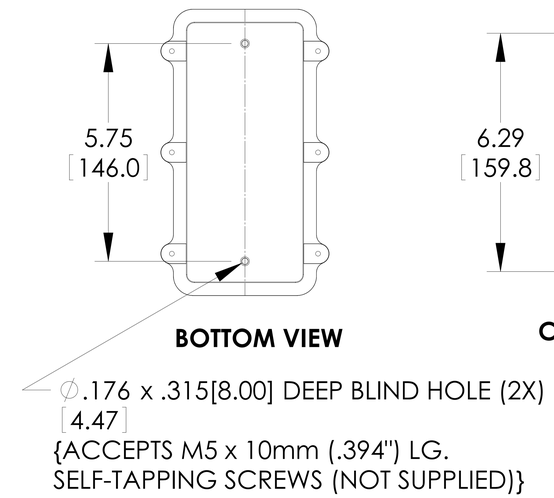


**BOTTOM VIEW**

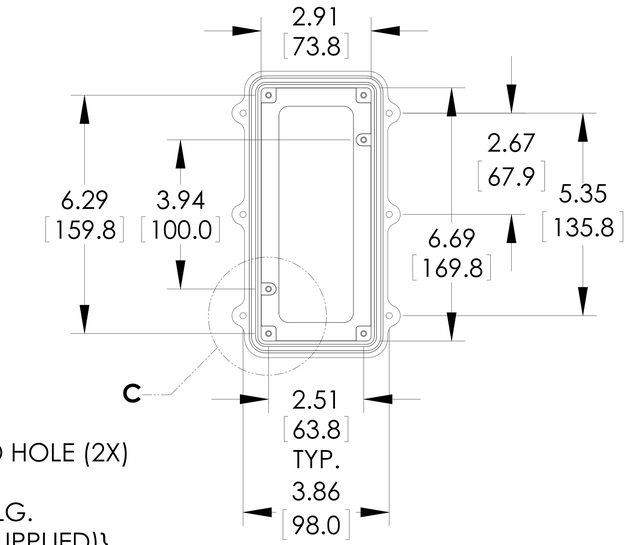


**INSIDE COVER DETAILS**

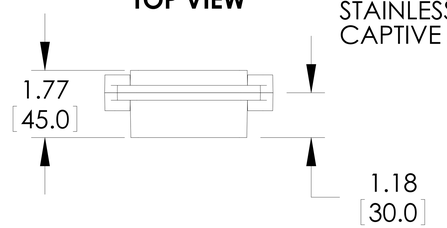


MEETS NEMA 1, 2, 4, 4X, 12, 13 AND IP67 RATINGS

MATERIAL - ALUMINUM ALLOY ADC-12

FINISH - NATURAL (NO SUFFIX PART NO.)
- SMOOTH BLACK (-B SUFFIX PART NO.)

TOLERANCES: ALL HOLE DIAMETERS ±.005[±.13]
ALL OTHER DIMENSIONS ±.02[±.4]

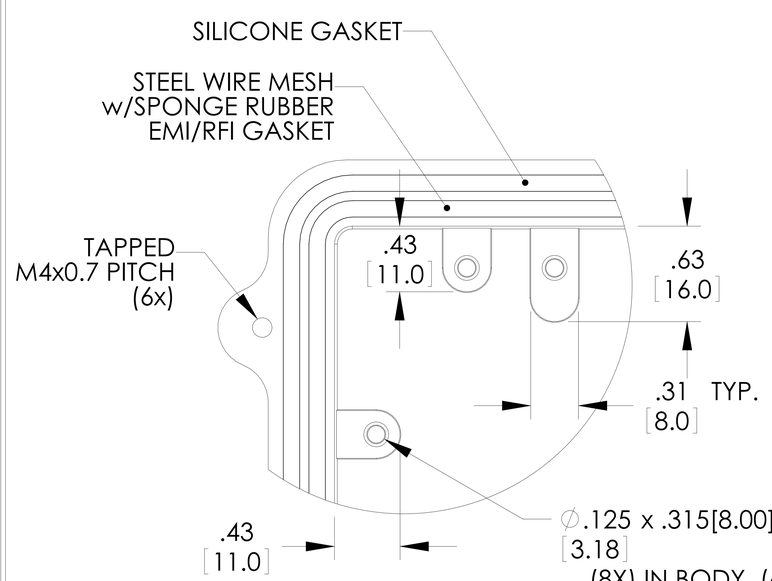


**DETAIL B**
**SCALE 4 : 1**

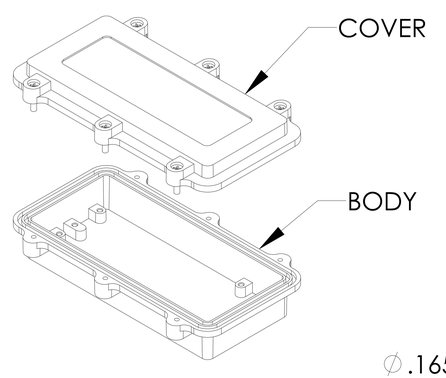


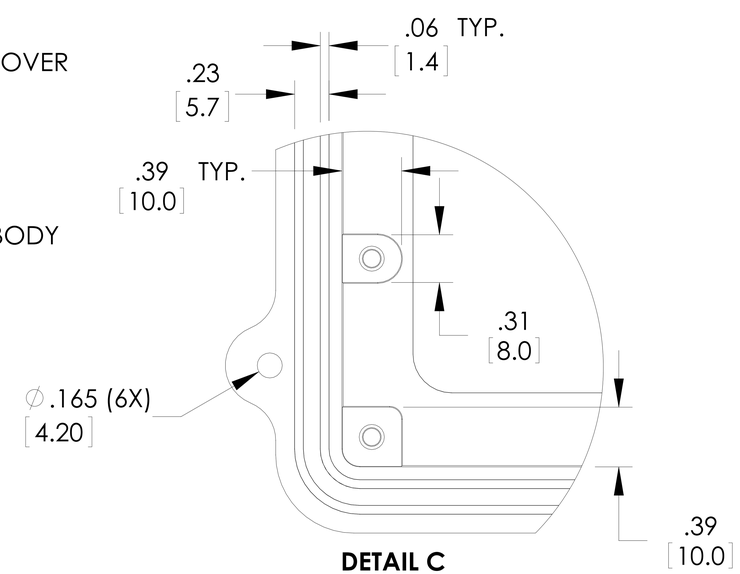


**DETAIL C**
**SCALE 4 : 1**

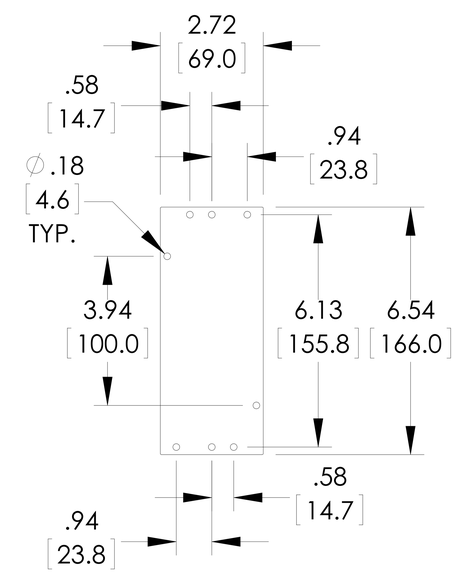


SUGGESTED PC BOARD OR
INTERNAL PANEL LAYOUT