PART NAME	NON-METALLIC ENCLOSURE (STYLE B)	PART No.	NBB-10243 & NBB-10263 & NBB-15243 & NBB-22243

MATERIAL:

UL LISTED INDOOR VERSION

SOLID BODY & COVER ____ ABS/PC BLENDED PLASTIC
UL94-5VB FLAMMABILITY RATING

CLEAR COVER _____ POLYCARBONATE PLASTIC
UL94V-0 FLAMMABILITY RATING
UV STABILIZED

UL LISTED OUTDOOR VERSION

SOLID BODY & COVER ____ PBT/PC BLENDED PLASTIC
UL94-5VA FLAMMABILITY RATING
UV STABILIZED

ABS VERSION

SOLID BODY & COVER ____ ABS
UL94-HB FLAMMABILITY RATING

ALL VERSIONS

GASKET _____ MODIFIED POLYURETHANE

NOTE: UNIT COMES COMPLETE WITH
(4) WALL MOUNTING BRKTS.
& (4) M5 x 10mm LG. TRUSS
HD. MACHINE SCREWS (NOT SHOWN)

COVER INCLUDES GRAY POLYURETHANE GASKET.

INTERNAL HINGED PANEL MOUNTING BRACKETS,
STAINLESS STEEL LOCKING HASP,
AIR AND MOISTURE VENTS AND GALVANIZED
STEEL INTERNAL PANEL ARE NOT INCLUDED,
BUT CAN BE PURCHASED SEPARATELY.

FINISH:

BODY _____ LIGHT GRAY
COVER _____ LIGHT GRAY OR CLEAR

LATCHES & HINGES _____ NON-METALLIC
WALL MOUNTING BRACKETS ___ STAINLESS STEEL

INDUSTRY STANDARDS:

UL LISTED INDOOR VERSION
UL508 TYPE 1, 2, 3, 3R, 4, 4X INDOOR, 12 & 13
NEMA TYPE 1, 2, 3, 3R, 4, 4X, 12 & 13
IEC529-IP65

UL LISTED OUTDOOR VERSION
UL508 TYPE 1, 2, 3, 3R, 4, 4X, 12 & 13
NEMA TYPE 1, 2, 3, 3R, 4, 4X, 12 & 13
IEC529-IP65

ABS VERSION
NEMA TYPE 1, 2, 3, 3R, 4, 4X, 12 & 13
IEC529-IP65

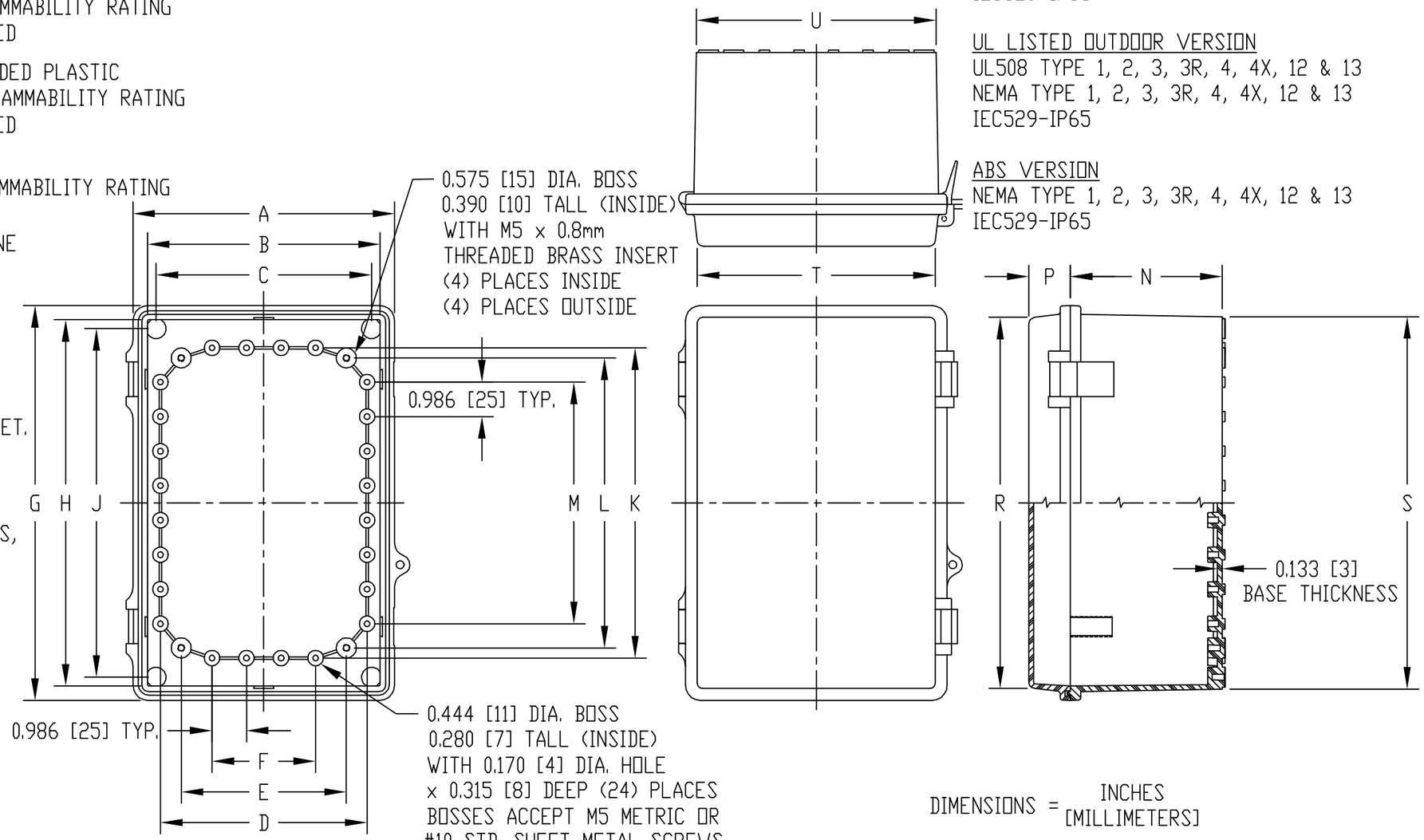

VIEW LESS COVER

DIMENSIONS = INCHES [MILLIMETERS]

NOTE: ALL DIMENSIONS HAVE ±0.039 [±1] TOLERANCE UNLESS OTHERWISE SPECIFIED

UL LISTED INDOOR VERSION		UL LISTED OUTDOOR VERSION	ABS VERSION	DIMENSIONS																		
PART NO.		PART NO.	PART NO.																			
SOLID COVER	CLEAR COVER	SOLID COVER	SOLID COVER	A	B	C	D	E	F	G	H	J	K	L	M	N	P	R	S	T	U
NBB-10243	NBB-10263	NBB-15243	NBB-22243	7.475	6.650	6.150	5.900	4.717	2.960	11.280	10.462	9.955	8.860	8.278	6.902	4.330	1.185	10.600	10.640	6.800	6.840
				[190]	[169]	[156]	[150]	[120]	[75]	[287]	[266]	[253]	[225]	[210]	[175]	[110]	[30]	[269]	[270]	[173]	[175]

Revised 26JUN07