PART NAME	NBF SERIES PLASTIC NEMA BOX	PART No.	NBF-32002 & NBF-32102 & NBF-32202 & NBF-32302 & NBF-32402	REVISION DATE	8/31/2010

MATERIAL	FLAMMABILITY RATING	CONTINUOUS OPERATING TEMP.
ABS	UL94-HB	-40˚C ~ +60˚C / -40˚F ~ 140˚F
CLEAR PC	UL94-V0 UV STABLILIZED	-40˚C ~ +130˚C / -40˚F ~ 266˚F
ABS / PC BLEND	UL94-5VA	-40˚C ~ +85˚C / -40˚F ~ 185˚F
PBT / PC BLEND	UL94-5VA + UV (f1)	-40˚C ~ +75˚C / -40˚F ~ 167˚F

FINISH:
BODY_____ LIGHT GRAY
COVER_____ LIGHT GRAY OR CLEAR
LATCHES & HINGES_____ PLASTIC
WALL MOUNTING BRACKETS__ STAINLESS STEEL
& HARDWARE

BODY

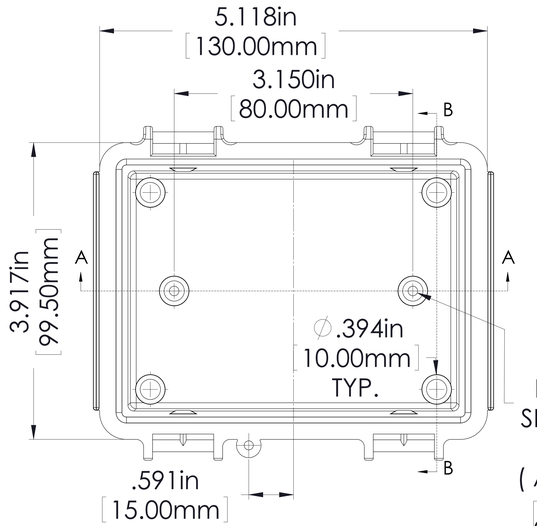

∅.126in
[3.20mm]
FOR M4 x 10mm LG.
SELF-TAPPING SCREWS
2 PLCS.
(ABS VERSIONS ONLY)

M4 THREADED INSERTS
ON ALL OTHER VERSIONS
USE M4 x 8mm LG.
MACHINE SCREWS.
2 PLCS.

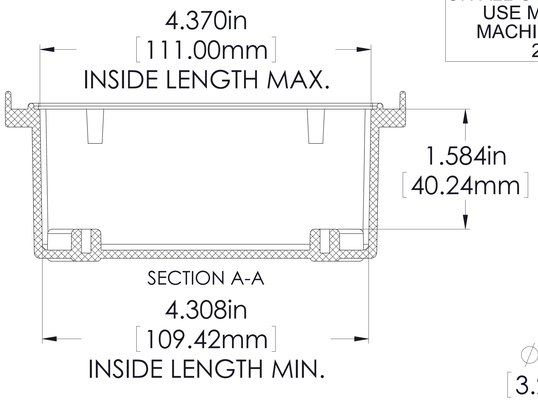

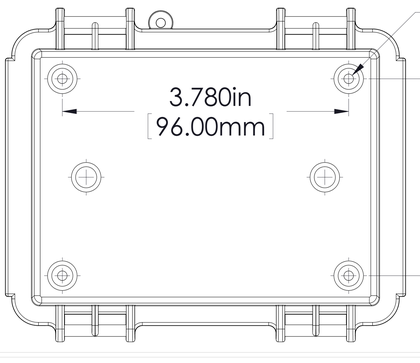

∅.126in
[3.20mm]
FOR M4 x 10mm LG.
SELF-TAPPING SCREWS
4 PLCS.

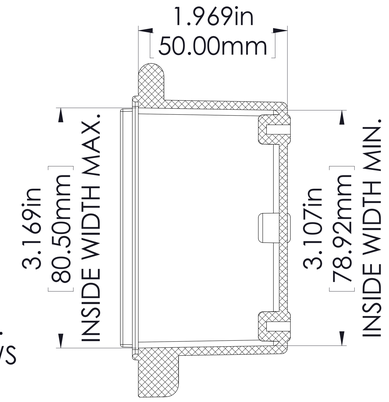

SECTION B-B

ASSEMBLY

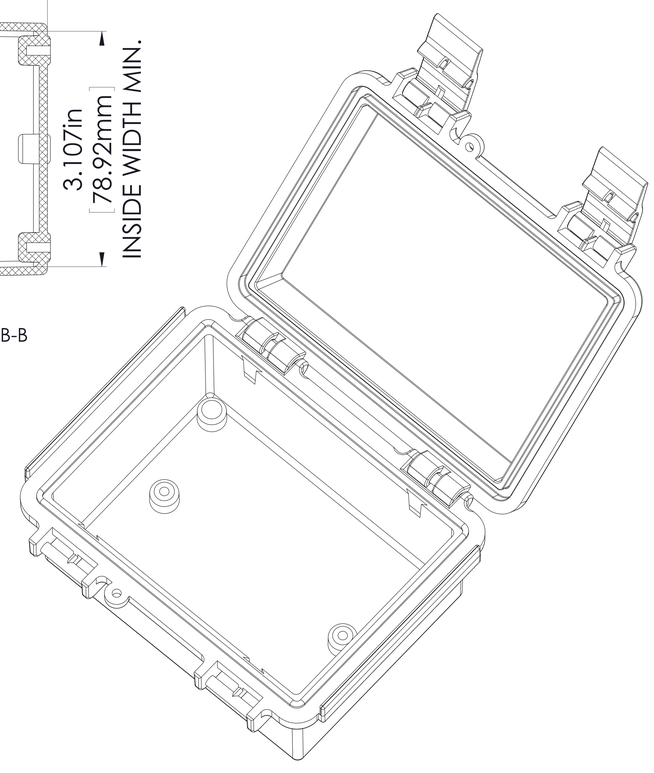

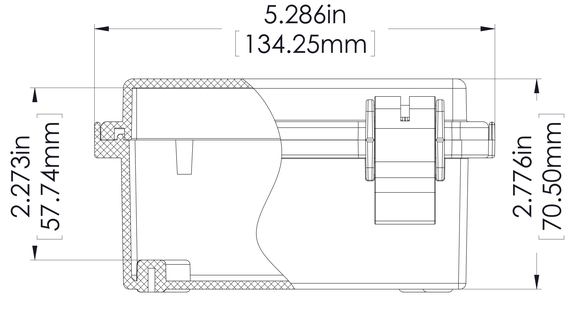

COVER

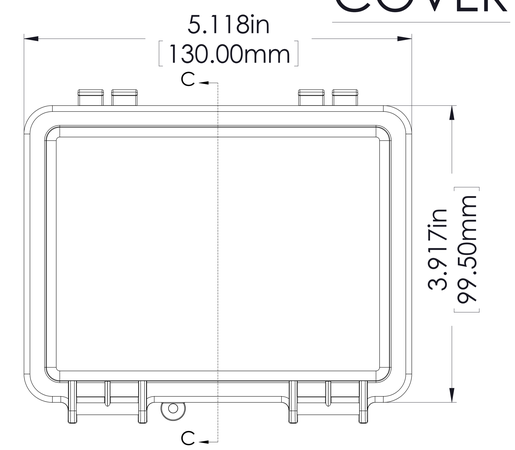

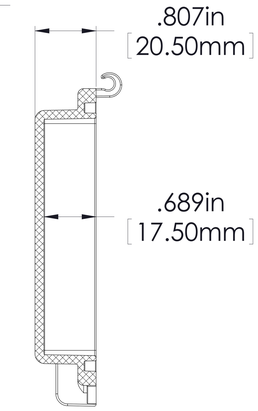

SECTION C-C

NOTES:

1) UNIT COMES COMPLETE WITH (4) WALL MOUNTING BRACKETS & (4) M4 x 10mm LG. SELF-TAPPING SCREWS. (NOT SHOWN)

2) BOXES DESIGNED TO MEET FOLLOWING STANDARDS: NEMA 1,2,4,4X AND IEC529-IP65 REQUIREMENTS.

TOLERANCES:

ALL DIMENSIONS HAVE
±0.039in. [±1mm] TOLERANCE
UNLESS OTHERWISE SPECIFIED.

PART NO.	MATERIAL		USE
	BODY	COVER	
NBF-32002	ABS	ABS	INDOOR
NBF-32102	ABS / PC	ABS / PC	INDOOR
NBF-32202	ABS / PC	CLEAR PC	INDOOR
NBF-32302	PBT / PC	PBT / PC	OUTDOOR
NBF-32402	PBT / PC	CLEAR PC	OUTDOOR