Load Switch with Level-Shift

UM3865P SOT363

General Description

The UM3865P includes a p- and n-channel MOSFET in a single SOT363 package. The low on-resistance p-channel MOSFET is tailored for use as a load switch. The n-channel, with an external resistor, can be used as a level-shift to drive the p-channel load switch. The n-channel MOSFET has internal ESD protection and can be driven by logic signals as low as 1.5V. The UM3865P operates on supply lines from 1.8V to 8V, and can drive loads up to 1A.

Applications

- Battery Packs
- Battery-powered Portable Equipment
- Cellular and Cordless Telephones

Features

- 300 mΩ Low On-Resistance
- 1.8V to 8V Input
- 1.5V to 8V Logic Level Control
- Low Profile, Small Footprint SOT363 Package
- 2000V ESD Protection On Input Switch
- Adjustable Slew-Rate

Pin Configurations

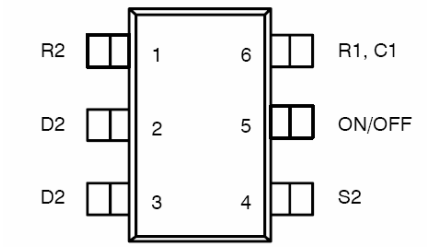

Top View

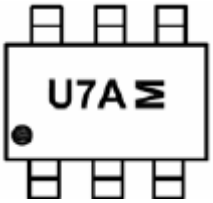

M: Month Code
UM3865P
SOT363

Ordering Information

Part Number	Packaging Type	Marking Code	Shipping Qty
UM3865P	SOT363	U7A	3000pcs/7 Inch Tape & Reel

Typical Application Circuit

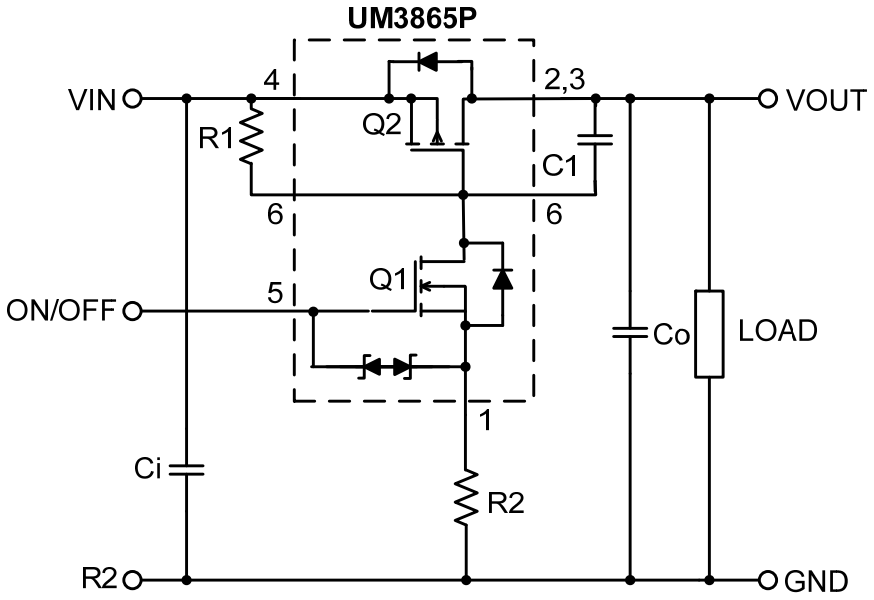

COMPONENTS		
R1	Pull-Up Resistor	Typical 20kΩ to 1MΩ*
R2	Optional Slew-Rate Control	Typical 0 to 50kΩ
C1	Optional Slew-Rate Control	Typical 1000pF

*Minimum R1 value should be at least 10×R2 to ensure Q1 turn-on.

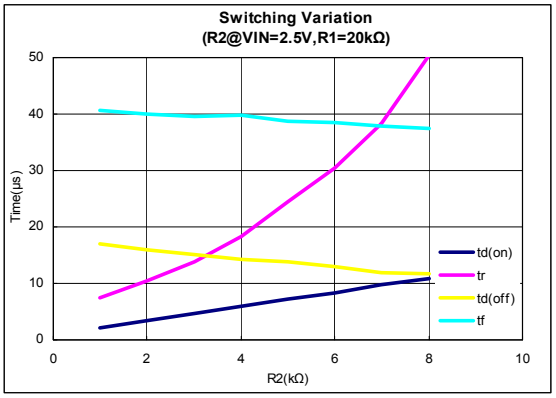

Note: For R2 switching variations with other VIN/R1 combinations See Typical Characteristics

Absolute Maximum Ratings

Symbol	Parameter	Limit	Unit
V_{IN}	Input Voltage	8	V
$V_{ON/OFF}$	ON/OFF Voltage	8	
I_L	Continuous Load Current(1)(2)	±1	A
	Pulse Load Current(2)(3)	±5	
I_S	Continuous Source Current (Source-Drain Diode)	-1.0	
P_D	Maximum Power Dissipation	0.5	W
T_J ,T_{STG}	Junction and Storage Temperature Range	- 50 to +150	℃
ESD	ESD Rating, MIL-STD-883D HBM	2000	V
$R_{\theta JA}$	Thermal Resistance, Junction-to-Ambient	250	℃/W

Electrical Characteristics (T_J=25℃, Unless Otherwise Noted)

Symbol	Parameter	Test Condition	Min	Typ	Max	Unit
OFF Characteristics						
I_{FL}	Reverse Leakage Current	V_{IN}=8V, $V_{ON/OFF}$=0V			1	μA
V_{SD}	Diode Forward Voltage	I_S =-1 A		-0.73	-1	V
ON Characteristics						
V_{IN}	Input Voltage Range		1.8		8	V
$R_{DS(ON)}$	Static Drain-to-Source On-Resistance	$V_{ON/OFF}$=1.5V, V_{IN}=4.5V, I_D=1.0A		0.300	0.350	Ω
		$V_{ON/OFF}$=1.5V,V_{IN}=2.5V, I_D=1.0A		0.400	0.450	
$I_{D(on)}$	On-State (p-channel) Drain Current	V_{IN-OUT}≤0.2V,V_{IN}=5V, $V_{ON/OFF}$=1.5V	0.7			A
		V_{IN-OUT}≤0.3V,V_{IN}=3V, $V_{ON/OFF}$=1.5V	0.8			

Notes:
(1): Surface Mounted on FR4 Board
(2): V_{IN}=8V,$V_{ON/OFF}$=8V, T_A=25℃
(3): Pulse test: Pulse Width ≤ 300μs, duty cycle ≤ 2%

Typical Characteristics (T_J=25℃, Unless Otherwise Noted)

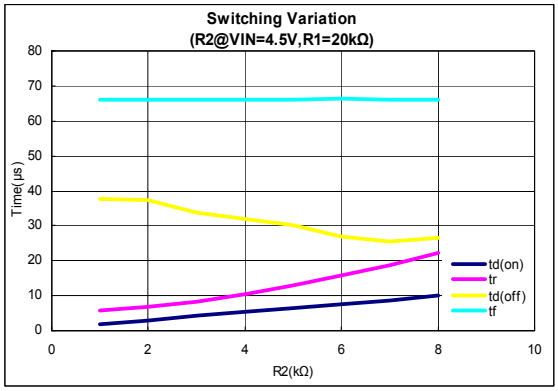

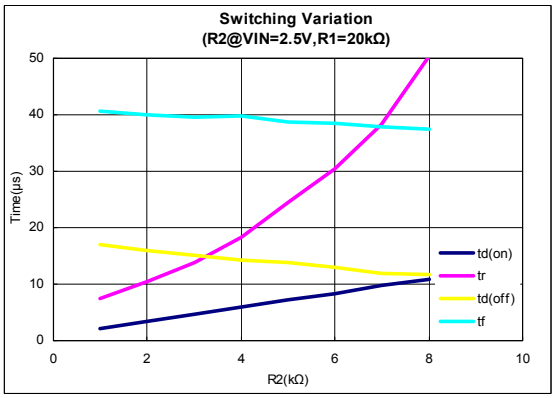

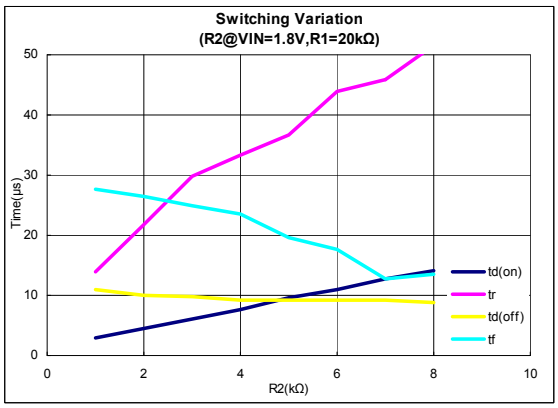

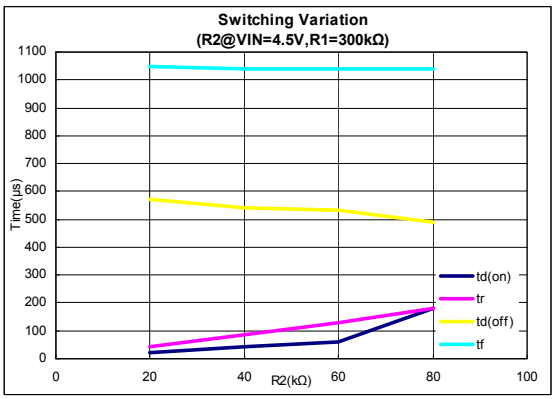

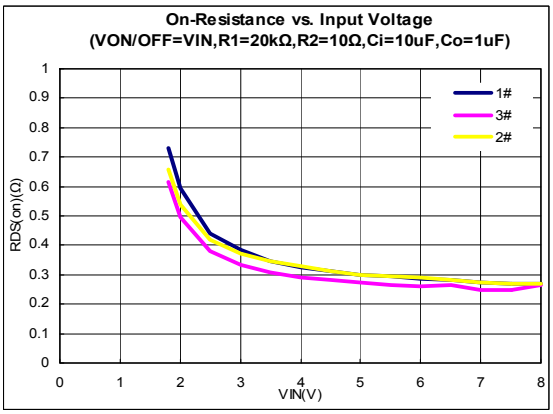

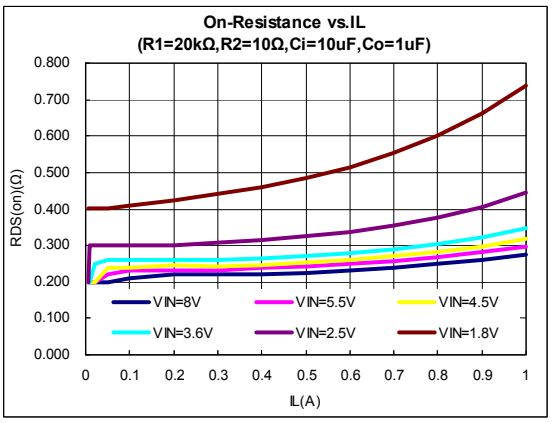

Package Information

UM3865P SOT363

Outline Drawing

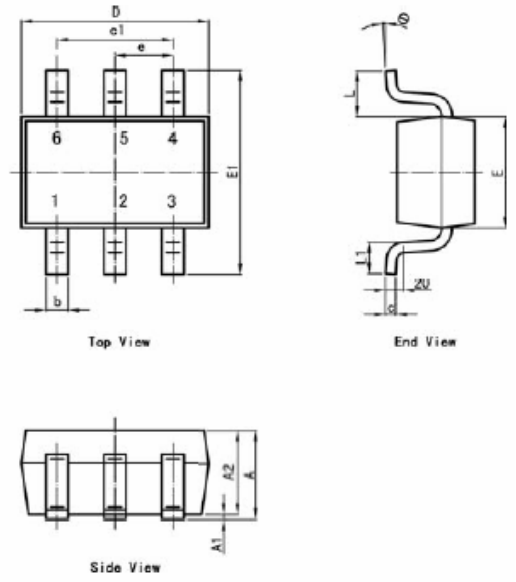

DIMENSIONS				
Symbol	MILLIMETERS		INCHES	
	Min	Max	Min	Max
A	0.900	1.100	0.035	0.043
A1	0.000	0.100	0.000	0.004
A2	0.900	1.000	0.036	0.039
b	0.100	0.350	0.004	0.014
c	0.080	0.220	0.003	0.009
D	1.800	2.200	0.071	0.087
E	1.150	1.350	0.045	0.053
E1	2.000	2.450	0.079	0.096
e	0.650REF		0.026REF	
e1	1.200	1.400	0.047	0.055
L	0.525REF		0.021REF	
L1	0.260	0.460	0.010	0.018
θ	0°	8°	0°	8°

Land Pattern

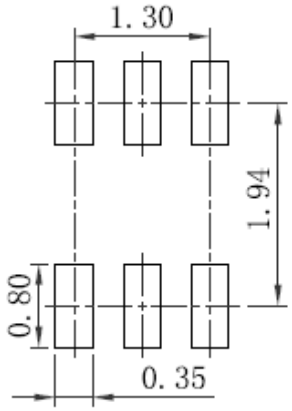

NOTES:
1. Compound dimension: 2.10×1.25;
2. Unit: mm;
3.General tolerance ±0.05mm unless otherwise specified;
4. The layout is just for reference.

Tape and Reel Orientation

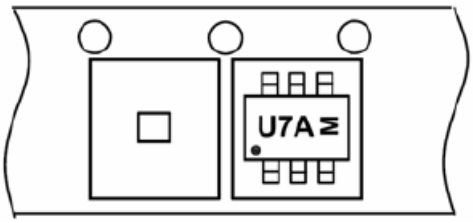

IMPORTANT NOTICE

The information in this document has been carefully reviewed and is believed to be accurate. Nonetheless, this document is subject to change without notice. Union assumes no responsibility for any inaccuracies that may be contained in this document, and makes no commitment to update or to keep current the contained information, or to notify a person or organization of any update. Union reserves the right to make changes, at any time, in order to improve reliability, function or design and to attempt to supply the best product possible.

Union Semiconductor, Inc

Add: 2F, No. 3, Lane 647 Songtao Road, Shanghai 201203

Tel: 021-51093966

Fax: 021-51026018

Website: www.union-ic.com