DESCRIPTION

The PT5612 is a compact electronic ballast control IC mainly for the fluorescent lamp. The PT5612 incorporates an active electronic ballast controller and a 650V half-bridge high side driver. Two advanced active-features, active dead-time control and active frequency ZVS, are included in PT5612. And PT5612 also includes crest factor over-current and over-heat protection. In order to prevent the lamp flash in the initial start-up, a soft-start circuitry is integrated into PT5612. The programmable voltage controlled oscillator can permit the ballast engineer design their products conveniently. The 8-pin IC, PT5612, makes the ballast system much simpler and saves lots of external components. PT5612 is available in SOP8 and DIP8 package.

FEATURES

- Integrated 650V half-bridge high side driver
- Active dead-time control
- Active frequency ZVS
- Crest factor over-current protection
- Programmable pre-heat time
- Programmable run frequency
- Over-heat protection
- Soft-start functionality
- Supporting SOP 8 and Dip 8 package

APPLICATION

- Fluorescent lamp electronic ballast

BLOCK DIAGRAM

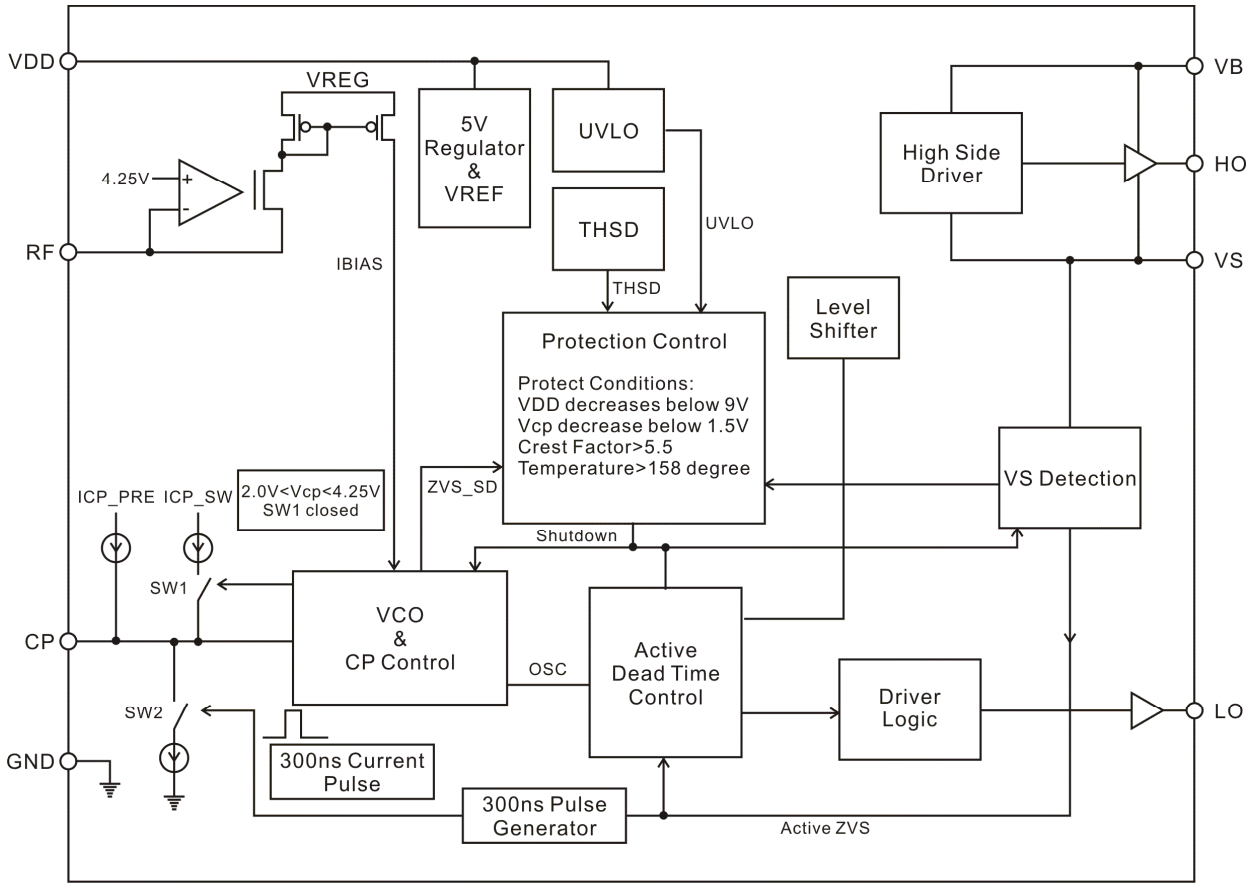

TYPICAL APPLICATION CIRCUIT

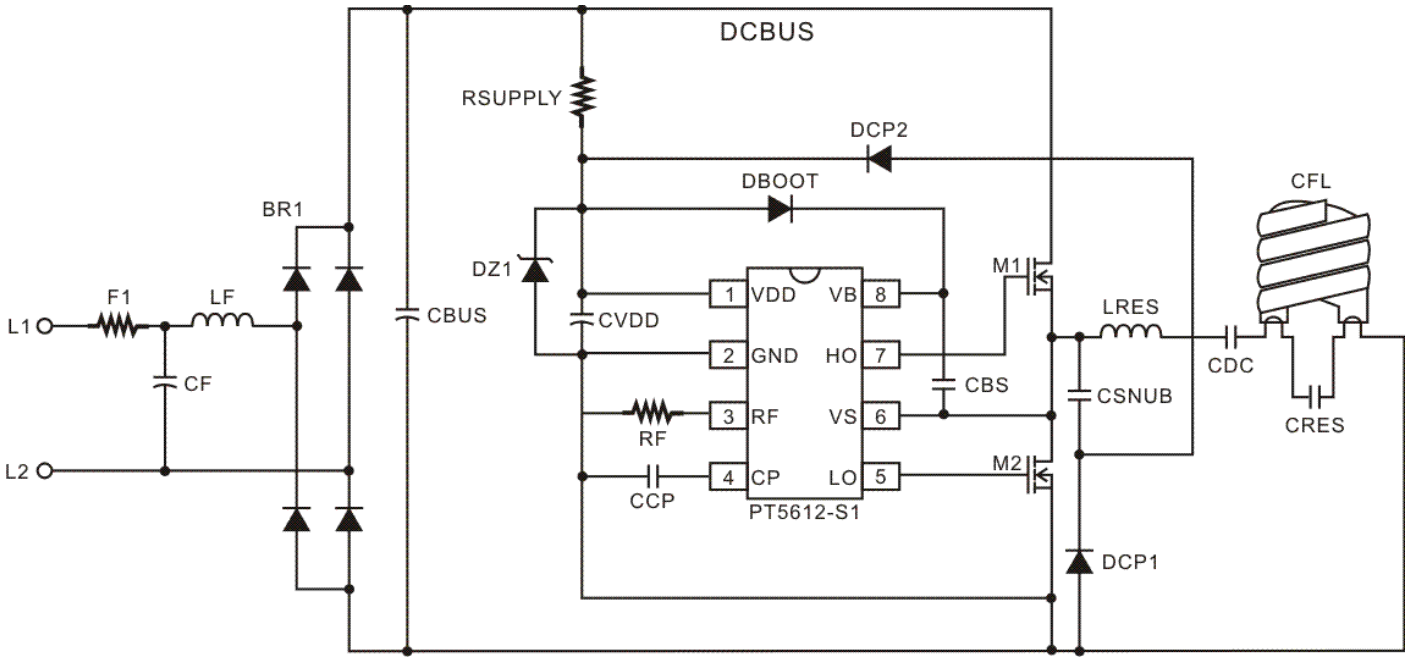

ORDER INFORMATION

Valid Part Number	Package Type	Top Code
PT5612-S1	8 Pins, SOP, 150mil	PT5612-S1
PT5612-S2	8 Pins, SOP, 150mil	PT5612-S2
PT5612	8 Pins, DIP, 300mil	PT5612
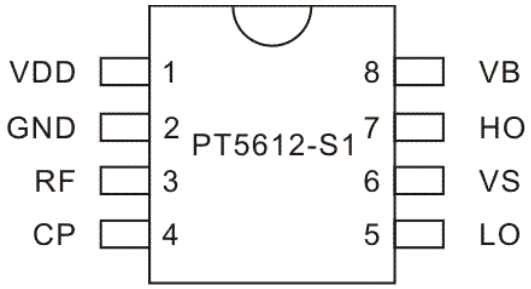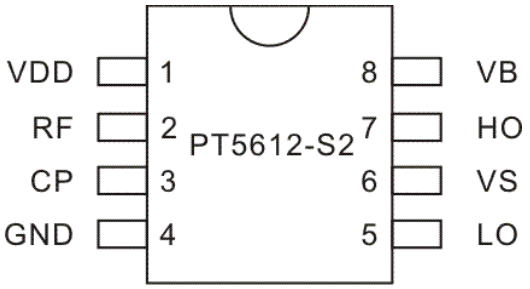
PIN CONFIGURATION