THESE DRAWINGS ARE THE PROPERTY OF QUALTEK ELECTRONICS AND NOT TO BE REPRODUCED FOR OR COMMUNICATED TO A THIRD PARTY WITHOUT THE EXPRESS WRITTEN PERMISSION OF AN OFFICER OF QUALTEK ELECTRONICS.

REVISION			
REV.	DESCRIPTION	DATE	APPROVED

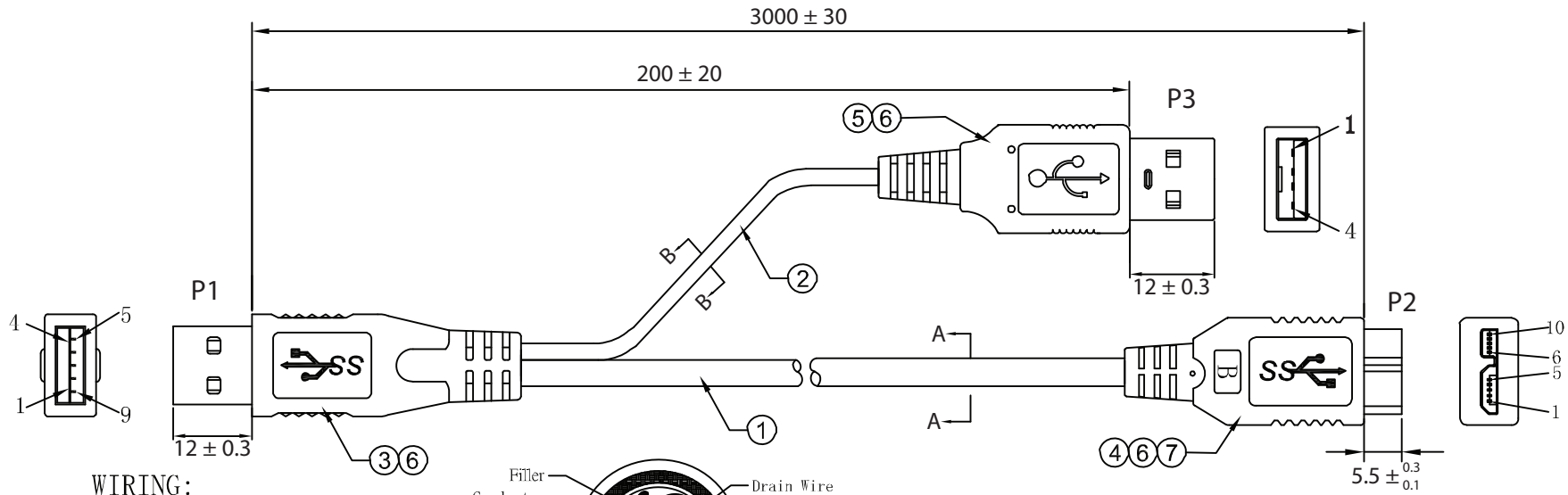

WIRING:

P3		P1	COLOR	P2
1	RED	1	RED	1
		2	WHITE	2
		3	GREEN	3
4	BLACK	4	BLACK	5
		5	BLUE	6
		6	YELLOW	7
		7	DRAIN WIRE	8
		8	PURPLE	9
		9	ORANGE	10
SHIELD	BRAID	SHIELD	BRAID	SHIELD

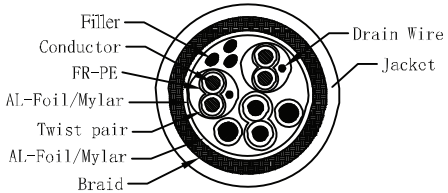

A-A

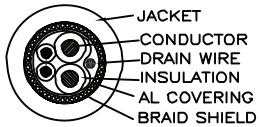

B-B

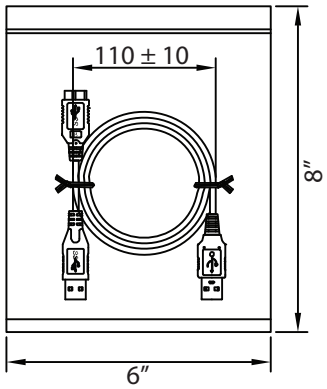

NOTES:

1. CABLE 1: UL20276
   (1Px30AWG+D+AL+MY)x2C+1Px30AWG+2Cx24AWG+AL+B
   OUTER JACKET: BLACK, O.D.: 5.5mm
2. CABLE 2: UL2725
   (1Px30AWG+28AWGx2C)+A+B(32B AM)+D
   OUTER JACKET: BLACK, O.D.: 3.5mm
2. CONNECTORS: USB 3.0 A MALE TO MICRO USB 3.0 B MALE + POWER
3. HOOD: MOLDED TYPE, COLOR: BLACK
4. PACKING: 1PC/POLYBAG
5. RoHS COMPLIANT

CONTROLLED

No.	PARTS NAME	SPECIFICATION STANDARD	QTY	REMARKS
1	CABLE	UL 20276 O.D. 5.5mm COLOR: BLACK	1	
2	CABLE	UL 2725 O.D. 3.5mm COLOR: BLACK	1	
3	USB 3.0 A M 9PIN GOLD PLATED	30U" SHELL NICKEL PLATED INSULATOR BLUE	1	
4	MICRO USB3.0 B M 10PIN GOLD PLATED	15U" SHELL NICKEL PLATED INSULATOR BLACK	1	
5	USB A/M 4PIN GOLD PLATED FLASH	SHELL NICKEL PLATED INSULATOR BLACK	1	
6	PVC	45P PVC BLACK	20	g
7	PE	CLEAR PE	3	g
8	CABLE TIE	L=9cm COLOR: BLACK	2	

Dim range (mm)	Tolerance +/- (mm)
0-1	0.15
1-6	0.20
6-18	0.30
18-50	0.50
50-120	0.70
120-250	0.90
250-500	1.20

Qualtek Electronics Corp.
WCI DIVISION

Part Number: 3023035-03M RoHS Compliant

Description:
USB 3.0 A/M - MICRO USB 3.0 B/M + POWER CABLE

UNIT: mm

Drawn / Date	Checked / Date	Approved / Date
R.Nuti 06-25-10	06-25-10	LY / 06-25-10