THESE DRAWINGS ARE THE PROPERTY OF QUALTEK ELECTRONICS AND NOT TO BE REPRODUCED FOR OR COMMUNICATED TO A THIRD PARTY WITHOUT THE EXPRESS WRITTEN PERMISSION OF AN OFFICER OF QUALTEK ELECTRONICS.

REVISION			
REV.	DESCRIPTION	DATE	APPROVED
B	RoHS Compliancy	06-01-06	DP

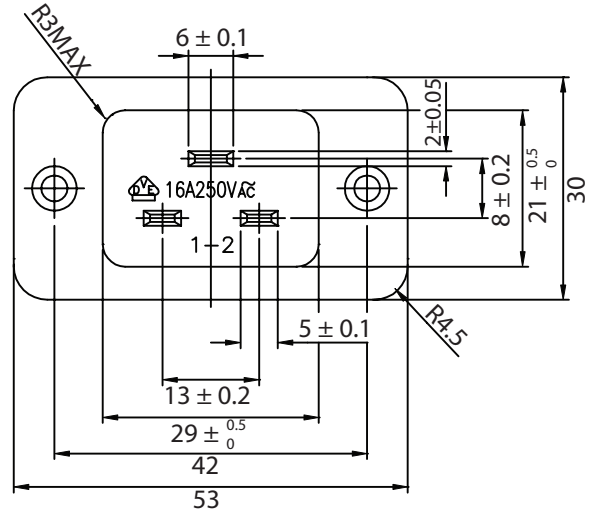

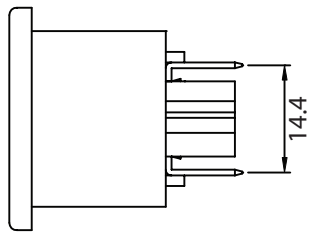

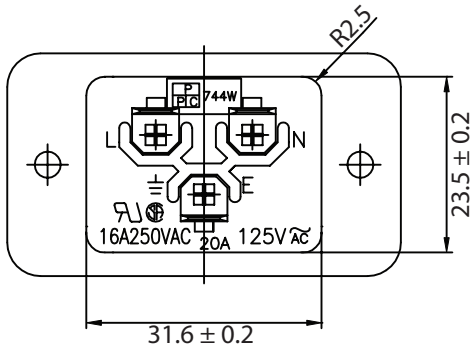

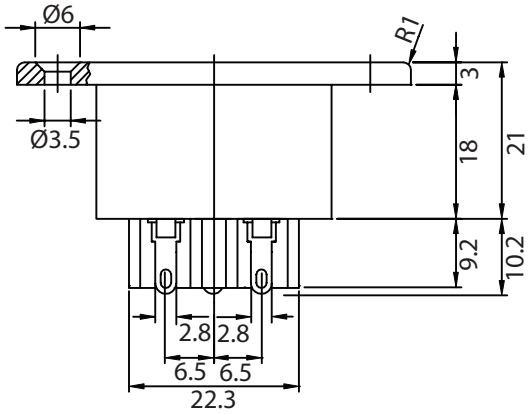

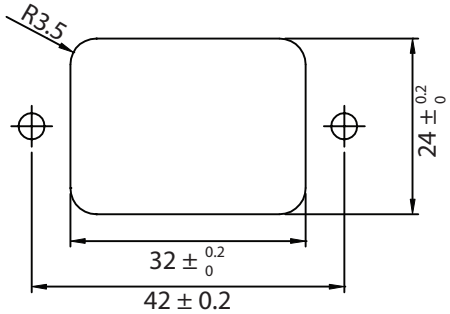

PANEL CUTOUT

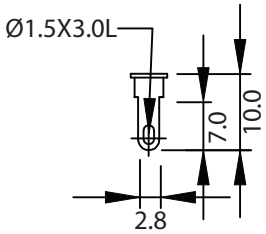

CONTROLLED

NOTES:

RATING:
UL, CSA: 20A 250V AC/16A 250V AC
VDE: 16A 250V AC
APPROVALS: UL,CSA, VDE
IEC 60320 C20
RoHS COMPLIANT

Dim range (mm)	Tolerance +/- (mm)
0-1	0.15
1-6	0.20
6-18	0.30
18-50	0.50
50-120	0.70
120-250	0.90
250-500	1.20

Qualtek Electronics Corp.
PPC DIVISION

Part Number: 744W-00/01 RoHS Compliant

Description: AC RECEPTACLE

	UNIT: mm	REV. B
Drawn / Date	Checked / Date	Approved / Date
B.Zhang 02-27-03	02-27-03	JJH / 02-27-03