Product Data Sheet

Part No. GT-0950RP3 Non-Washable Type

GT-0950RP3

∅ 9 X H4

DIMENSIONS

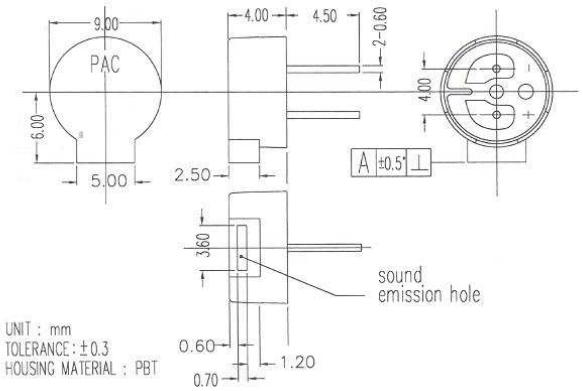

Type	Unit	
Color		Black
Rated Voltage	(V)	5
Operating Voltage	(V)	4-6
Current Consumption	(mA)	MAX.80
Coil Resistance	(Ω)	30±3
Sound Output (Min)	(dB)	90
Resonance Frequency	(Hz)	3100
Operating Temp	(C)	-20~+60
Storage Temp	(C)	-30~+70
Weight	(g)	1
Terminal		PIN TYPE
Dimension	mm	9 x H4
*applied voltage: Rated Voltage, 1/2 duty, square wave *distance for measurement: 10cm		

FREQUENCY RESPONSE

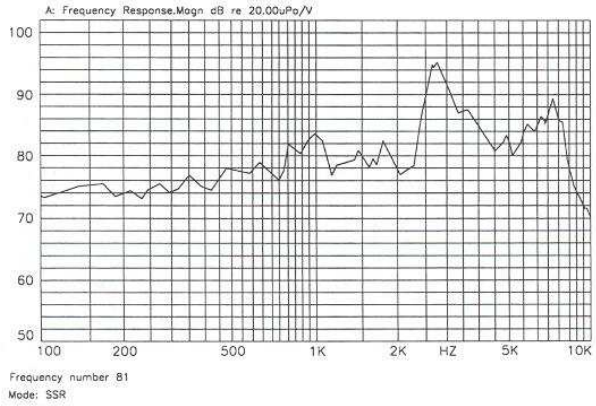

211 N. First Street Minneapolis, MN. 55401 612-849-6205
www.soberton.com