# BDX88B

Dimensions in mm (inches).

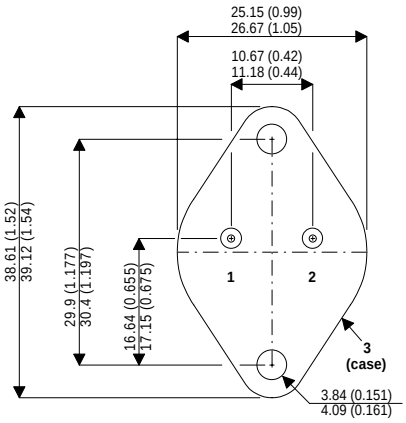


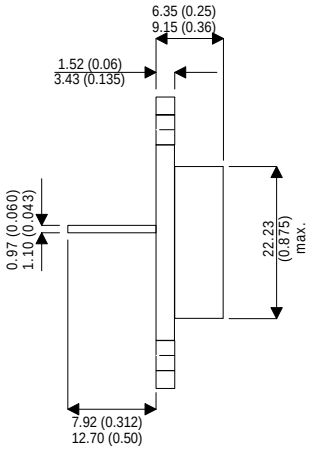


## Bipolar PNP Device in a Hermetically sealed TO3 Metal Package.

## Bipolar PNP Device.

## $V_{CEO}$ = 80V

## $I_C$ = 12A

**All Semelab hermetically sealed products can be processed in accordance with the requirements of BS, CECC and JAN, JANTX, JANTXV and JANS specifications.**

**TO3 (TO204AA)**

**PINOUTS**

1 – Base 2 – Emitter Case - Collector

| Parameter | Test Conditions | Min. | Typ. | Max. | Units |
|---|---|---|---|---|---|
| $V_{CEO}$* | | | | 80 | V |
| $I_{C(CONT)}$ | | | | 12 | A |
| $h_{FE}$ | @ 3/6 ($V_{CE}$ / $I_C$) | 750 | | | - |
| $f_t$ | | | | | Hz |
| $P_D$ | | | | 117 | W |

* Maximum Working Voltage

This is a shortform datasheet. For a full datasheet please contact sales@semelab.co.uk.

**Semelab Plc reserves the right to change test conditions, parameter limits and package dimensions without notice. Information furnished by Semelab is believed to be both accurate and reliable at the time of going to press. However Semelab assumes no responsibility for any errors or omissions discovered in its use.**

**Semelab plc.** Telephone +44(0)1455 556565. Fax +44(0)1455 552612.

E-mail: sales@semelab.co.uk Website: http://www.semelab.co.uk

Generated
31-Jul-02