NEGATIVE ADJUSTABLE VOLTAGE REGULATOR

TT electronics
Semelab Limited

IP137SMD / LM137SMD
IP137ASMD / LM137ASMD
IP137HVSMD / LM137HVSMD
IP137AHVSMD / LM137AHVSMD
IP337SMD / LM337SMD
IP337ASMD / LM337ASMD
IP337HVSMD / LM337HVSMD
IP337AHVSMD / LM337AHVSMD

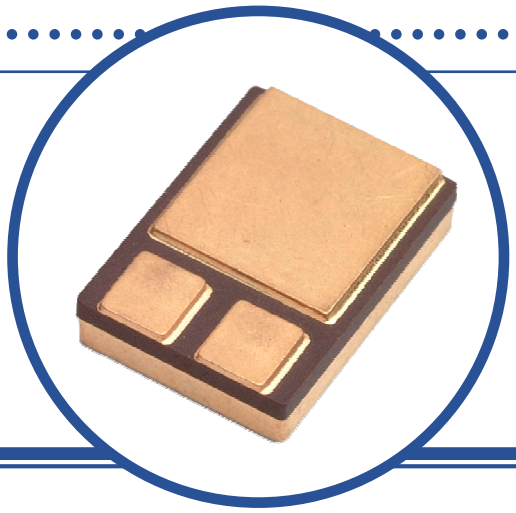

FEATURES

- 1.5A output current guaranteed
- Internal thermal overload protection
- Output short circuit protected
- Hermetic Ceramic Surface Mount package
- Screening Options Available

APPLICATIONS

- Adjustable Power Supplies
- System Power Supplies
- Precision Voltage / Current Regulators

DESCRIPTION

The 137/337 Series regulators are adjustable 3 terminal voltage regulators capable of supplying in excess of -1.5A over an output voltage range of -1.2V to -37V. The regulators are exceptionally easy to apply requiring only 2 external resistors to set the output voltage and 1 output capacitor for frequency compensation.

Every effort has been made to make these devices easy to use and difficult to damage. Internal current limiting and power limiting coupled with true thermal limiting prevents damage due to overloads or shorts, even if the regulators are not fastened to a heat sink.

ABSOLUTE MAXIMUM RATINGS (T_C = 25°C unless otherwise stated)

V_I - V_O	Input – Output Voltage Differential	Standard	40V
		HV Series	50V
I_O	Output Current		Internally Limited
P_D	Power Dissipation		Internally Limited
T_J	Junction Temperature Range	137 Series	-55 to +150°C
		337 Series	0 to +150°C
T_{stg}	Storage Temperature Range		-65 to +150°C

THERMAL PROPERTIES

Symbols	Parameters	Min.	Typ.	Max.	Units
$R_{\theta JC}$	Thermal Resistance, Junction To Case			3.5	°C/W

** This datasheet supersedes document 2831

Semelab Limited reserves the right to change test conditions, parameter limits and package dimensions without notice. Information furnished by Semelab is believed to be both accurate and reliable at the time of going to press. However Semelab assumes no responsibility for any errors or omissions discovered in its use. Semelab encourages customers to verify that datasheets are current before placing orders.

SEMELAB
A subsidiary of TT electronics plc.

Semelab Limited Coventry Road, Lutterworth, Leicestershire, LE17 4JB
Telephone +44 (0) 1455 556565 Fax +44 (0) 1455 552612 Email: sales@semelab-tt.com Website: http://www.semelab-tt.com

ELECTRICAL CHARACTERISTICS(1)(3) (T_C = 25°C unless otherwise stated)

LM137, IP137, LM137HV, IP137HV								
Symbols	**Parameters**	**Test Conditions**			**Min.**	**Typ**	**Max.**	**Units**
V_{REF}	Reference Voltage	I_{OUT} = 10mA			-1.225	-1.250	-1.275	V
		10mA ≤ I_{OUT} ≤ I_{MAX}, P ≤ P_{MAX}, 3V ≤ (V_{IN}-V_{OUT}) ≤ V_{MAX}		•	-1.200	-1.250	-1.300	
$\frac{\Delta V_{OUT}}{\Delta I_{OUT}}$	Line Regulation (2)	3V ≤ (V_{IN}-V_{OUT}) ≤ V_{MAX}				0.010	0.020	%/V
				•		0.020	0.050	
$\frac{\Delta V_{OUT}}{\Delta I_{OUT}}$	Load Regulation (2)(3)	10mA ≤ I_{OUT} ≤ I_{MAX}	V_{OUT} ≤ 5V			15	25	mV
			V_{OUT} ≥ 5V			0.3	0.5	%
			V_{OUT} ≤ 5V	•		20	50	mV
			V_{OUT} ≥ 5V	•		0.3	1.0	%
	Thermal Regulation	V_{IN} = 7.92V, I_{OUT} = 1.5A, P_D = 10W, T_A = 25°C, 10ms Pulse				0.002	0.02	%/W
	Ripple Regulation	V_{OUT} = -10V f = 120Hz	C_{ADJ} = 0			60		dB
			C_{ADJ} = 10μF	•	66	77		
I_{ADJ}	Adjust Pin Current			•		65	100	μA
ΔI_{ADJ}	Adjust Pin Current Change	10mA ≤ I_{OUT} ≤ I_{MAX}		•		0.5	5	
		3V ≤ (V_{IN}-V_{OUT}) ≤ 40V		•		2	5	
		3V ≤ (V_{IN}-V_{OUT}) ≤ 50V **(HV Series)**		•		3	6	
I_{MIN}	Minimum Load Current	(V_{IN} - V_{OUT}) ≤ 40V		•		2.5	5	mA
		(V_{IN} - V_{OUT}) ≤ 10V		•		1.2	3	
I_{CL}	Current Limit	(V_{IN} - V_{OUT}) ≤ 15V		•	1.5	2.2	3.2	A
		(V_{IN} - V_{OUT}) = 40V		•	0.24	0.4		
		(V_{IN} - V_{OUT}) = 50V **(HV Series)**		•	0.2	0.4	0.8	
$\frac{\Delta V_{OUT}}{\Delta TEMP}$	Temperature Stability			•		0.6		%
$\frac{\Delta V_{OUT}}{\Delta TIME}$	Long Term Stability	T_A = 125°C, 1000Hrs				0.3	1.0	
e_n	RMS Output Noise (% of V_{OUT})	T_A = 25°C, 10Hz ≤ f ≤ 10KHz				0.003		

Notes
The ● denotes the specifications which apply over the full operating temperature range.

(1) Test conditions unless otherwise stated: V_{IN} - V_{OUT} = 5V, I_{OUT} = 0.5A, P_{MAX} = 10W, I_{MAX} = 1.5A

(2) Regulation is measured at constant junction temperature, using pulse testing at a low duty cycle. Changes in output voltage due to heating effects are covered under thermal regulation specifications. Load regulation is measured at the junction of the wide and narrow portion of the output lead.

(3) V_{MAX} = 40V for LM137, IP137, LM137A, IP137A, LM337, IP337, LM337A, IP337A
V_{MAX} = 50V for LM137HV, IP137HV, LM137AHV, IP137AHV, LM337HV, IP337HV, LM337AHV, IP337AHV

ELECTRICAL CHARACTERISTICS(1)(3) (T_C = 25°C unless otherwise stated)

LM137A, IP137A, LM137AHV, IP137AHV							
Symbols	**Parameters**	**Test Conditions**		**Min.**	**Typ**	**Max.**	**Units**
V_{REF}	Reference Voltage	I_{OUT} = 10mA		-1.238	-1.250	-1.262	V
		10mA ≤ I_{OUT} ≤ I_{MAX}, P ≤ P_{MAX}, 3V ≤ (V_{IN}-V_{OUT}) ≤ V_{MAX}	●	-1.220	-1.250	-1.280	
$\frac{\Delta V_{OUT}}{\Delta I_{OUT}}$	Line Regulation (2)	3V ≤ (V_{IN}-V_{OUT}) ≤ V_{MAX}			0.005	0.010	%/V
			●		0.010	0.030	
$\frac{\Delta V_{OUT}}{\Delta I_{OUT}}$	Load Regulation (2)(3)	10mA ≤ I_{OUT} ≤ I_{MAX}, V_{OUT} ≤ 5V			5	25	mV
		10mA ≤ I_{OUT} ≤ I_{MAX}, V_{OUT} ≥ 5V			0.1	0.5	%
		10mA ≤ I_{OUT} ≤ I_{MAX}, V_{OUT} ≤ 5V	●		10	50	mV
		10mA ≤ I_{OUT} ≤ I_{MAX}, V_{OUT} ≥ 5V	●		0.2	1.0	%
	Thermal Regulation	V_{IN} = 7.92V, I_{OUT} = 1.5A, P_D = 10W, T_A = 25°C, 10ms Pulse			0.002	0.02	%/W
	Ripple Regulation	V_{OUT} = -10V, f = 120Hz, C_{ADJ} = 0		60	66		dB
		V_{OUT} = -10V, f = 120Hz, C_{ADJ} = 10µF	●	70	80		
I_{ADJ}	Adjust Pin Current		●		65	100	µA
ΔI_{ADJ}	Adjust Pin Current Change	10mA ≤ I_{OUT} ≤ I_{MAX}	●		0.2	2	
		3V ≤ (V_{IN}-V_{OUT}) ≤ 40V	●		1.0	5	
		3V ≤ (V_{IN}-V_{OUT}) ≤ 50V **(HV Series)**	●		2	6	
I_{MIN}	Minimum Load Current	(V_{IN} - V_{OUT}) ≤ 40V	●		2.5	5	mA
		(V_{IN} - V_{OUT}) ≤ 10V	●		1.2	3	
I_{CL}	Current Limit	(V_{IN} - V_{OUT}) ≤ 15V	●	1.5	2.2	3.2	A
		(V_{IN} - V_{OUT}) = 40V	●	0.24	0.4	1.0	
		(V_{IN} - V_{OUT}) = 50V **(HV Series)**	●	0.2	0.4	0.8	
$\frac{\Delta V_{OUT}}{\Delta TEMP}$	Temperature Stability		●		0.6	1.5	%
$\frac{\Delta V_{OUT}}{\Delta TIME}$	Long Term Stability	T_A = 125°C, 1000Hrs			0.3	1.0	
e_n	RMS Output Noise (% of V_{OUT})	T_A = 25°C, 10Hz ≤ f ≤ 10KHz			0.003		

Notes
The ● denotes the specifications which apply over the full operating temperature range.

(1) Test conditions unless otherwise stated: V_{IN} - V_{OUT} = 5V, I_{OUT} = 0.5A, P_{MAX} = 10W, I_{MAX} = 1.5A

(2) Regulation is measured at constant junction temperature, using pulse testing at a low duty cycle. Changes in output voltage due to heating effects are covered under thermal regulation specifications. Load regulation is measured at the junction of the wide and narrow portion of the output lead.

(3) V_{MAX} = 40V for LM137, IP137, LM137A, IP137A, LM337, IP337, LM337A, IP337A
V_{MAX} = 50V for LM137HV, IP137HV, LM137AHV, IP137AHV, LM337HV, IP337HV, LM337AHV, IP337AHV

ELECTRICAL CHARACTERISTICS(1)(3) (T_C = 25°C unless otherwise stated)

LM337, IP337, LM337HV, IP337HV							
Symbols	**Parameters**	**Test Conditions**		**Min.**	**Typ**	**Max.**	**Units**
V_{REF}	Reference Voltage	I_{OUT} = 10mA		-1.213	-1.250	-1.287	V
		10mA ≤ I_{OUT} ≤ I_{MAX}, P ≤ P_{MAX}, 3V ≤ (V_{IN}-V_{OUT}) ≤ V_{MAX}	•	-1.200	-1.250	-1.300	
$\frac{\Delta V_{OUT}}{\Delta I_{OUT}}$	Line Regulation (2)	3V ≤ (V_{IN}-V_{OUT}) ≤ V_{MAX}			0.010	0.040	%/V
			•		0.020	0.070	
$\frac{\Delta V_{OUT}}{\Delta I_{OUT}}$	Load Regulation (2)(3)	10mA ≤ I_{OUT} ≤ I_{MAX}, V_{OUT} ≤ 5V			15	50	mV
		10mA ≤ I_{OUT} ≤ I_{MAX}, V_{OUT} ≥ 5V			0.3	1.0	%
		10mA ≤ I_{OUT} ≤ I_{MAX}, V_{OUT} ≤ 5V	•		20	70	mV
		10mA ≤ I_{OUT} ≤ I_{MAX}, V_{OUT} ≥ 5V	•		0.3	1.5	%
	Thermal Regulation	V_{IN} = 7.92V, I_{OUT} = 1.5A, P_D = 10W, T_A = 25°C, 10ms Pulse			0.003	0.04	%/W
	Ripple Regulation	V_{OUT} = -10V, f = 120Hz, C_{ADJ} = 0			60		dB
		V_{OUT} = -10V, f = 120Hz, C_{ADJ} = 10µF	•	66	77		
I_{ADJ}	Adjust Pin Current		•		65	100	µA
ΔI_{ADJ}	Adjust Pin Current Change	10mA ≤ I_{OUT} ≤ I_{MAX}	•		0.5	5	
		3V ≤ (V_{IN}-V_{OUT}) ≤ 40V	•		2	5	
		3V ≤ (V_{IN}-V_{OUT}) ≤ 50V **(HV Series)**	•		3	6	
I_{MIN}	Minimum Load Current	(V_{IN} - V_{OUT}) ≤ 40V	•		2.5	10	mA
		(V_{IN} - V_{OUT}) ≤ 10V	•		1.0	6	
I_{CL}	Current Limit	(V_{IN} - V_{OUT}) ≤ 15V	•	1.5	2.2	3.5	A
		(V_{IN} - V_{OUT}) = 40V	•	0.15	0.4		
		(V_{IN} - V_{OUT}) = 50V **(HV Series)**	•	0.1	0.4	0.8	
$\frac{\Delta V_{OUT}}{\Delta TEMP}$	Temperature Stability		•		0.6		%
$\frac{\Delta V_{OUT}}{\Delta TIME}$	Long Term Stability	T_A = 125°C, 1000Hrs			0.3	1.0	
e_n	RMS Output Noise (% of V_{OUT})	T_A = 25°C, 10Hz ≤ f ≤ 10KHz			0.003		

Notes
The ● denotes the specifications which apply over the full operating temperature range.

(1) Test conditions unless otherwise stated: V_{IN} - V_{OUT} = 5V, I_{OUT} = 0.5A, P_{MAX} = 10W, I_{MAX} = 1.5A

(2) Regulation is measured at constant junction temperature, using pulse testing at a low duty cycle. Changes in output voltage due to heating effects are covered under thermal regulation specifications. Load regulation is measured at the junction of the wide and narrow portion of the output lead.

(3) V_{MAX} = 40V for LM137, IP137, LM137A, IP137A, LM337, IP337, LM337A, IP337A
V_{MAX} = 50V for LM137HV, IP137HV, LM137AHV, IP137AHV, LM337HV, IP337HV, LM337AHV, IP337AHV

ELECTRICAL CHARACTERISTICS(1)(3) (T_C = 25°C unless otherwise stated)

LM337A, IP337A, LM337AHV, IP337AHV							
Symbols	**Parameters**	**Test Conditions**		**Min.**	**Typ**	**Max.**	**Units**
V_{REF}	Reference Voltage	I_{OUT} = 10mA		-1.238	-1.250	-1.262	V
		10mA ≤ I_{OUT} ≤ I_{MAX}, P ≤ P_{MAX}, 3V ≤ (V_{IN}-V_{OUT}) ≤ V_{MAX}	●	-1.220	-1.250	-1.280	
$\frac{\Delta V_{OUT}}{\Delta I_{OUT}}$	Line Regulation (2)	3V ≤ (V_{IN}-V_{OUT}) ≤ V_{MAX}			0.005	0.010	%/V
			●		0.010	0.030	
$\frac{\Delta V_{OUT}}{\Delta I_{OUT}}$	Load Regulation (2)(3)	10mA ≤ I_{OUT} ≤ I_{MAX}, V_{OUT} ≤ 5V			5	25	mV
		10mA ≤ I_{OUT} ≤ I_{MAX}, V_{OUT} ≥ 5V			0.1	0.5	%
		10mA ≤ I_{OUT} ≤ I_{MAX}, V_{OUT} ≤ 5V	●		10	50	mV
		10mA ≤ I_{OUT} ≤ I_{MAX}, V_{OUT} ≥ 5V	●		0.2	1.0	%
	Thermal Regulation	V_{IN} = 7.92V, I_{OUT} = 1.5A, P_D = 10W, T_A = 25°C, 10ms Pulse			0.002	0.02	%/W
	Ripple Regulation	V_{OUT} = -10V, f = 120Hz, C_{ADJ} = 0		60	66		dB
		V_{OUT} = -10V, f = 120Hz, C_{ADJ} = 10µF	●	70	80		
I_{ADJ}	Adjust Pin Current		●		65	100	µA
ΔI_{ADJ}	Adjust Pin Current Change	10mA ≤ I_{OUT} ≤ I_{MAX}	●		0.2	2	
		3V ≤ (V_{IN}-V_{OUT}) ≤ 40V	●		1.0	5	
		3V ≤ (V_{IN}-V_{OUT}) ≤ 50V **(HV Series)**	●		2	6	
I_{MIN}	Minimum Load Current	(V_{IN} - V_{OUT}) ≤ 40V	●		2.5	5	mA
		(V_{IN} - V_{OUT}) ≤ 10V	●		1.2	3	
I_{CL}	Current Limit	(V_{IN} - V_{OUT}) ≤ 15V	●	1.5	2.2	3.5	A
		(V_{IN} - V_{OUT}) = 40V	●	0.24	0.4	1.0	
		(V_{IN} - V_{OUT}) = 50V **(HV Series)**	●	0.2	0.4	0.8	
$\frac{\Delta V_{OUT}}{\Delta TEMP}$	Temperature Stability		●		0.6	1.5	%
$\frac{\Delta V_{OUT}}{\Delta TIME}$	Long Term Stability	T_A = 125°C, 1000Hrs			0.3	1.0	
e_n	RMS Output Noise (% of V_{OUT})	T_A = 25°C, 10Hz ≤ f ≤ 10KHz			0.003		

Notes
The ● denotes the specifications which apply over the full operating temperature range.

(1) Test conditions unless otherwise stated: V_{IN} - V_{OUT} = 5V, I_{OUT} = 0.5A, P_{MAX} = 10W, I_{MAX} = 1.5A

(2) Regulation is measured at constant junction temperature, using pulse testing at a low duty cycle. Changes in output voltage due to heating effects are covered under thermal regulation specifications. Load regulation is measured at the junction of the wide and narrow portion of the output lead.

(3) V_{MAX} = 40V for LM137, IP137, LM137A, IP137A, LM337, IP337, LM337A, IP337A
V_{MAX} = 50V for LM137HV, IP137HV, LM137AHV, IP137AHV, LM337HV, IP337HV, LM337AHV, IP337AHV

APPLICATIONS INFORMATION

High Stability Regulator

The output stability, load regulation, line regulation, thermal regulation, temperature drift, long term drift, and noise, can be improved by a factor of 6.6 over the standard regulator configuration. This assumes a zener has 20PPM/°C maximum drift and about 10 times lower noise than the regulator.

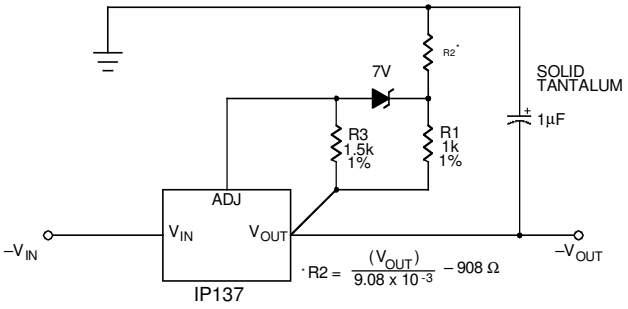

Multiple Tracking Regulators

In the application shown below, regulator #2 to "N" will track regulator #1 to within ±24mV initially, and to ±60mV over all load line, and temperature conditions.

If any regulator output is shorted to ground, all other outputs will drop to -2V. Load regulation of regulators #2 to "N" will be improved by V_{OUT} / 1.25V compared to a standard, so regulator #1 should be the one which has the lowest load current.

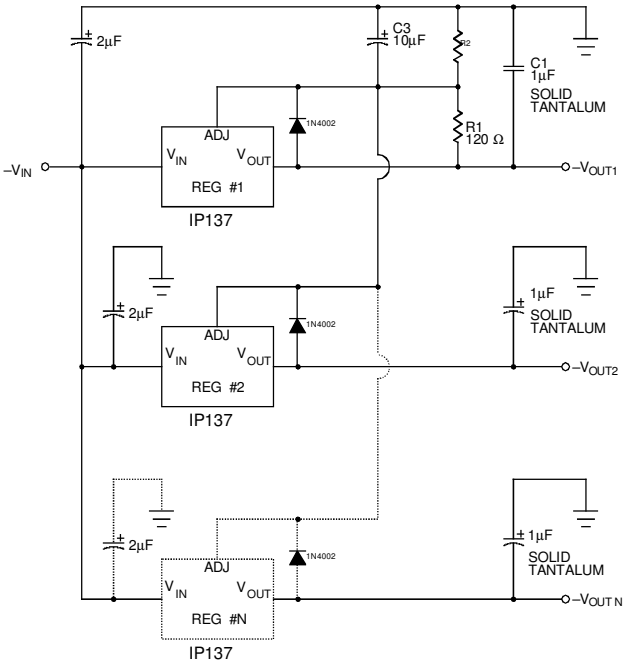

Dual Tracking Supply

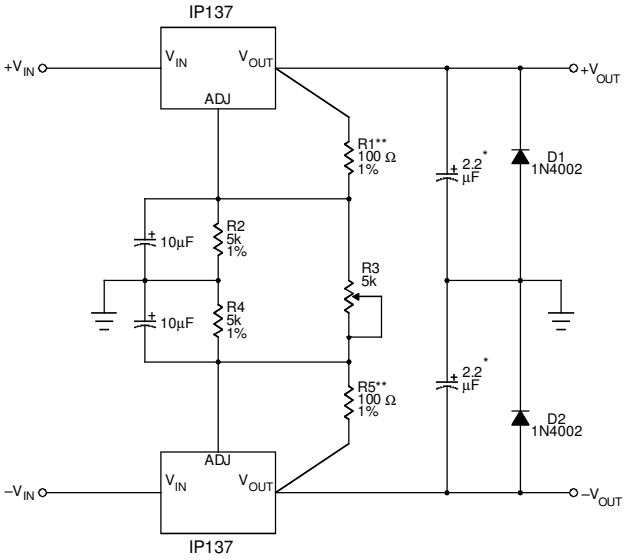

Current Regulator

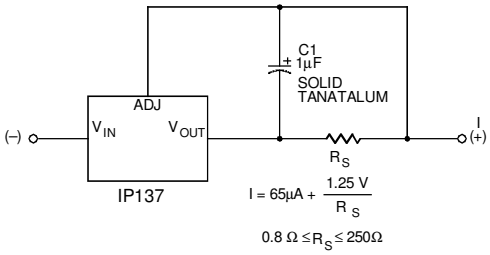

* Solid Tantalum
** R1 & R5 maybe trimmed slightly to improve tracking

MECHANICAL DATA

Dimensions in mm (inches)

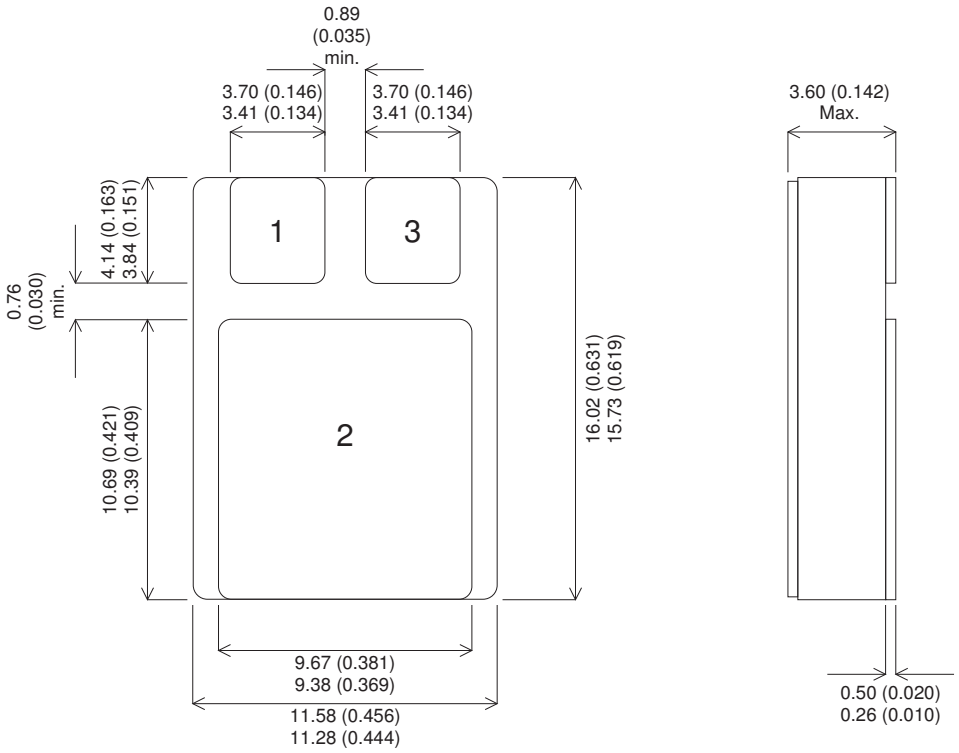

SMD1 (TO276AB)

Pin 1 = ADJ. Pin 2 = V_{IN} Pin 3 = V_{OUT}