CRESCENT
FREQUENCY PRODUCTS

CFG Series
Crystal

5x7x1.4mm
Ceramic SMD
RoHS Compliant
7.000MHz to
125.000MHz

Mechanical Dimensions

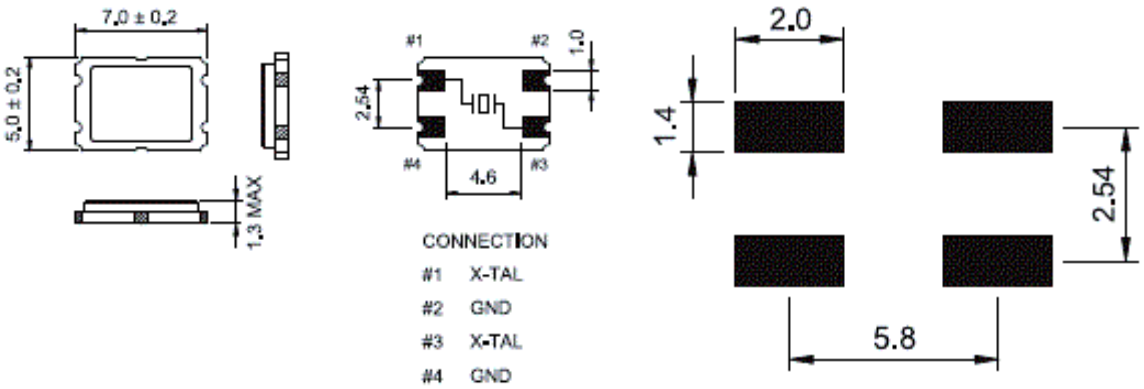

Dimensions are in millimeters

Electrical Specifications

Frequency Range		7.000MHz to 125.000MHz
Operating Temperature Range		-10° to 60°C, -20 to 70°C or –40° to 85°C
Storage Temperature Range		-55°C to 125°C
Aging		±5ppm / Year Max
Shunt Capacitance		7pF Max
Insulation Resistance		500 MΩ@ DC100V

Frequency	ESR	Mode
7.000MHz to 9.999MHz	<70Ω	Fundamental
10.000MHz to 14.999MHz	<60Ω	Fundamental
15.000MHz to 19.999MHz	<50Ω	Fundamental
20.000MHz to 34.999MHz	<40Ω	Fundamental
35.000MHz to 43.999MHz	<80Ω	3rd Overtone
44.00MHz to 79.999MHz	<60Ω	3rd Overtone
80.000MHz to 125.000MHz	<50Ω	3rd Overtone

Part Marking	
Line 1	CXX.XXX
XX.XXX = Frequency	
Line 2	YY ZZ
YY = Week of Year ZZ = Year	

Part Numbering Guide

CFG 18 B 2 A -25.000MHz-T

Series
CFG

Load Capacitance
S = Series Resistance
XX = XXpF

Tolerance / Stability
A = 50/100ppm
B = 50/50ppm
C = 30/50ppm
D = 15/30ppm
E = 10/15ppm
G = 30/30ppm

Packaging Options
Blank = Bulk
T = Tape & Reel

Center Frequency

Mode Of Operation
A = Fundamental
B = Third Overtone

Operating Temp Range
1 = -10°C to 60 °C
2 = -20°C to 70°C

Crescent Frequency Products, 19363 Willamette Dr. #120, West Linn, OR 97068
Phone: (949) 484-4332 | www.crescentfrequency.com