UF1600CT – UF1608CT

16A GLASS PASSIVATED DUAL ULTRAFAST RECTIFIER

Features

- Glass Passivated Die Construction
- Ultra-Fast Switching
- Low Forward Voltage Drop
- Low Reverse Leakage Current
- High Surge Current Capability
- Plastic Material has UL Flammability Classification 94V-O

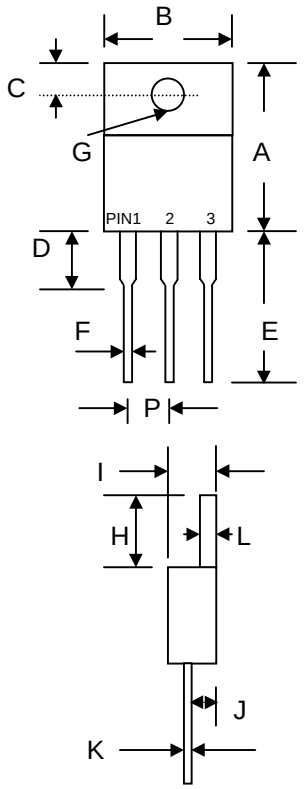

TO-220		
Dim	**Min**	**Max**
A	13.90	15.90
B	9.80	10.70
C	2.54	3.43
D	3.56	4.56
E	12.70	14.73
F	0.51	0.96
G	3.55 Ø	4.09 Ø
H	5.75	6.85
I	4.16	5.00
J	2.03	2.92
K	0.30	0.65
L	1.14	1.40
P	2.29	2.79
All Dimensions in mm		

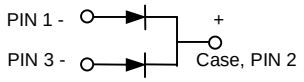

Mechanical Data

- Case: TO-220, Molded Plastic
- Terminals: Plated Leads Solderable per MIL-STD-202, Method 208
- Polarity: See Diagram
- Weight: 2.24 grams (approx.)
- Mounting Position: Any
- Mounting Torque: 11.5 cm-kg (10 in-lbs) Max.
- **Lead Free: For RoHS / Lead Free Version, Add "-LF" Suffix to Part Number, See Page 4**

Maximum Ratings and Electrical Characteristics @T_A=25℃ unless otherwise specified

Single Phase, half wave, 60Hz, resistive or inductive load.
For capacitive load, derate current by 20%.

Characteristic	Symbol	UF 1600CT	UF 1601CT	UF 1602CT	UF 1603CT	UF 1604CT	UF 1606CT	UF 1608CT	Unit
Peak Repetitive Reverse Voltage Working Peak Reverse Voltage DC Blocking Voltage	V_{RRM} V_{RWM} V_R	50	100	200	300	400	600	800	V
RMS Reverse Voltage	$V_{R(RMS)}$	35	70	140	210	280	420	560	V
Average Rectified Output Current @T_C = 105℃	I_O	16							A
Non-Repetitive Peak Forward Surge Current 8.3ms Single half sine-wave superimposed on rated load (JEDEC Method)	I_{FSM}	125							A
Forward Voltage @I_F = 8.0A	V_{FM}	1.0			1.3		1.7		V
Peak Reverse Current @T_A = 25℃ At Rated DC Blocking Voltage @T_A = 125℃	I_{RM}	10 500							µA
Reverse Recovery Time (Note 1)	t_{rr}	50					100		nS
Typical Junction Capacitance (Note 2)	C_j	80					50		pF
Operating and Storage Temperature Range	T_j, T_{STG}	-65 to +150							℃

Note: 1. Measured with IF = 0.5A, IR = 1.0A, IRR = 0.25A.
2. Measured at 1.0 MHz and applied reverse voltage of 4.0V D.C.

© 2006 Won-Top Electronics

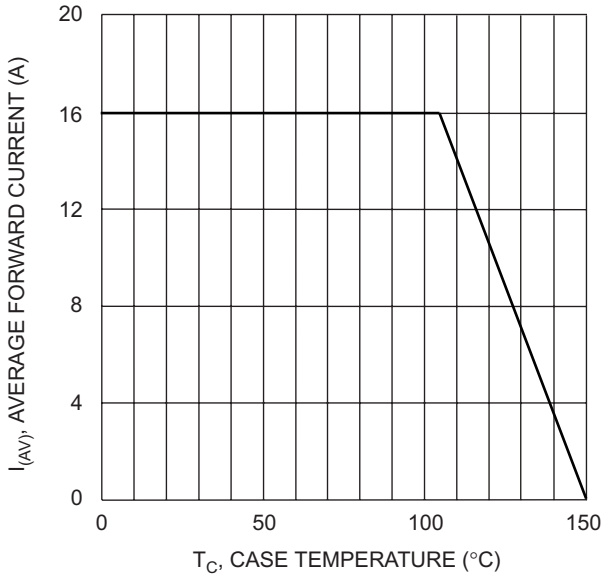

Fig. 1 Forward Current Derating Curve

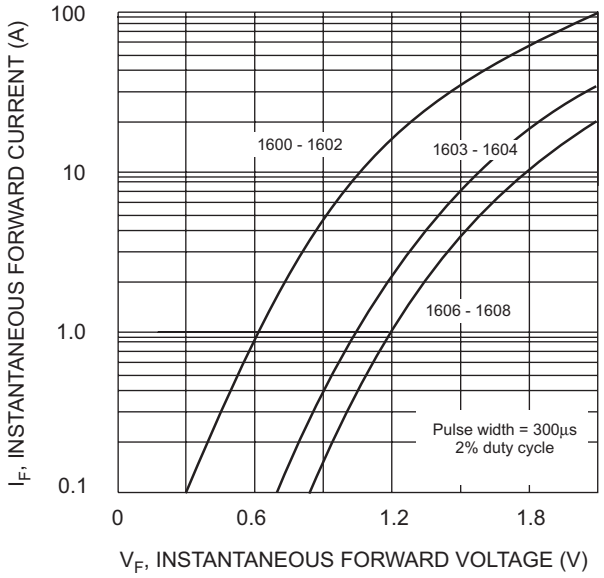

Fig. 2 Typical Forward Characteristics

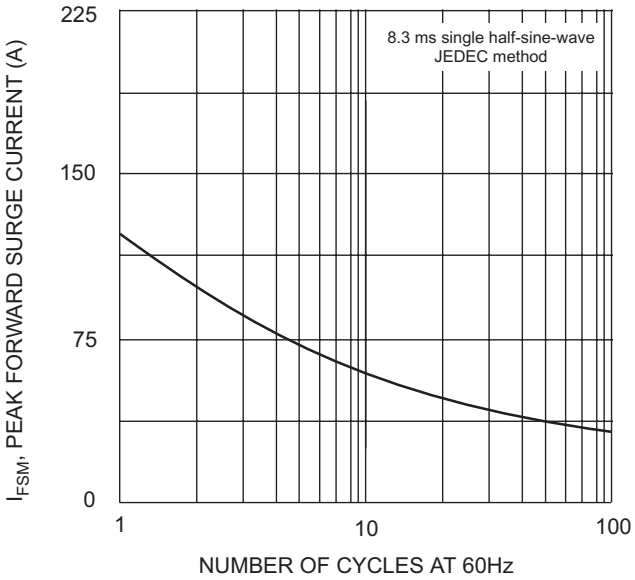

Fig. 3 Maximum Non-Repetitive Surge Current

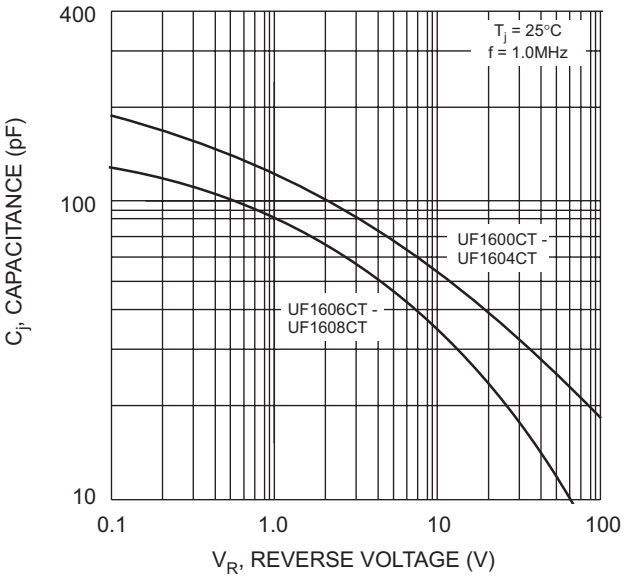

Fig. 4 Typical Junction Capacitance

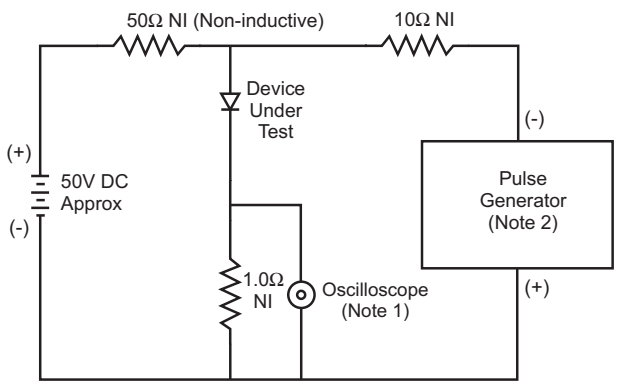

Notes:
1. Rise Time = 7.0ns max. Input Impedance = 1.0MΩ, 22pF.
2. Rise Time = 10ns max. Input Impedance = 50Ω.

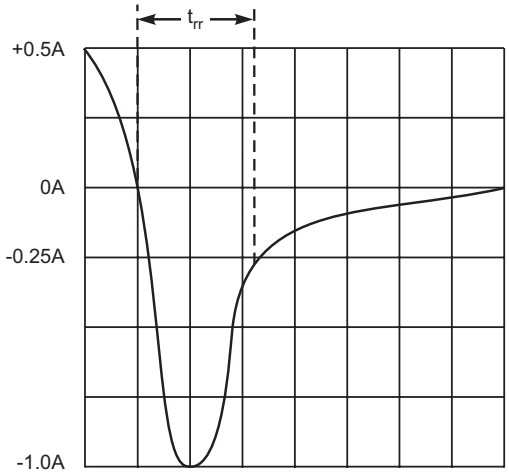

Set time base for 5/10ns/cm

Fig. 5 Reverse Recovery Time Characteristic and Test Circuit

 © 2006 Won-Top Electronics

MARKING INFORMATION

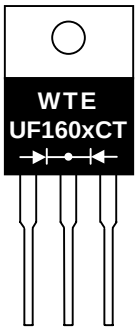

WTE	= Manufacturer's Logo
UF160xCT	= Device Number
x	= 0, 1, 2, 3, 4, 6 or 8
Polarity	= As Marked on Body

PACKAGING INFORMATION

BULK

Tube Size L x W x H (mm)	Quantity (PCS)	Inner Box Size L x W x H (mm)	Quantity (PCS)	Carton Size L x W x H (mm)	Quantity (PCS)	Approx. Gross Weight (KG)
525 x 31 x 6	50	555 x 145 x 95	2,000	572 x 306 x 218	8,000	19.0

Note: 1. Anti-static tube, water clear color.

RECOMMENDED SCREW MOUNTING ARRANGEMENT

Recommended isolated mounting when screw is at heatsink potential. 4-40 hardware is used.

Screw should not be tightened with any type of air-forced torque or equipment that may cause high impact on device package. The insulating bushing inside the mounting hole will insure the screw threads do not contact the metal base.

The interface should apply a layer of thermal grease or a highly conductive thermal pad for better heat dissipation.

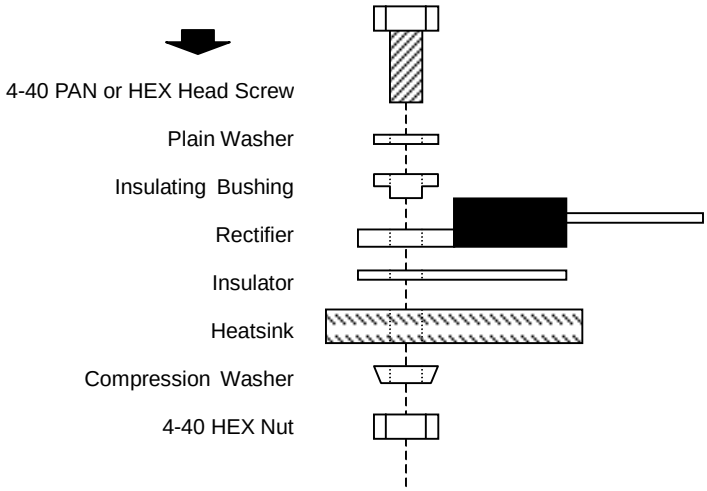

 © 2006 Won-Top Electronics

ORDERING INFORMATION

Product No.	Package Type	Shipping Quantity
UF1600CT	TO-220	50 Units/Tube
UF1601CT	TO-220	50 Units/Tube
UF1602CT	TO-220	50 Units/Tube
UF1603CT	TO-220	50 Units/Tube
UF1604CT	TO-220	50 Units/Tube
UF1606CT	TO-220	50 Units/Tube
UF1608CT	TO-220	50 Units/Tube

1. Shipping quantity given is for minimum packing quantity only. For minimum order quantity, please consult the Sales Department.
2. **To order RoHS / Lead Free version (with Lead Free finish), add "-LF" suffix to part number above. For example, UF1600CT-LF**.

Won-Top Electronics Co., Ltd (WTE) has checked all information carefully and believes it to be correct and accurate. However, WTE cannot assume any responsibility for inaccuracies. Furthermore, this information does not give the purchaser of semiconductor devices any license under patent rights to manufacturer. WTE reserves the right to change any or all information herein without further notice.

WARNING: DO NOT USE IN LIFE SUPPORT EQUIPMENT. WTE power semiconductor products are not authorized for use as critical components in life support devices or systems without the express written approval.

Won-Top Electronics Co., Ltd.
No. 44 Yu Kang North 3rd Road, Chine Chen Dist., Kaohsiung, Taiwan
Phone: 886-7-822-5408 or 886-7-822-5410
Fax: 886-7-822-5417
Email: sales@wontop.com
Internet: http://www.wontop.com

We power your everyday.

 © 2006 Won-Top Electronics