HER151 – HER158

1.5A ULTRAFAST DIODE

Features

- Diffused Junction
- Low Forward Voltage Drop
- High Current Capability
- High Reliability
- High Surge Current Capability

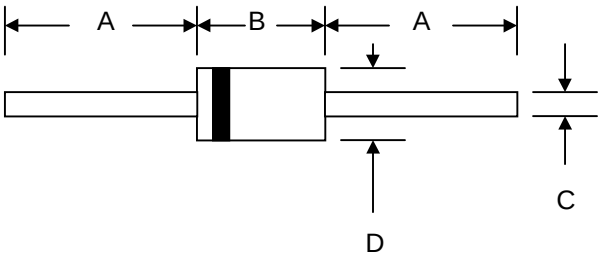

DO-15		
Dim	**Min**	**Max**
A	25.4	—
B	5.50	7.62
C	0.71	0.864
D	2.60	3.60
All Dimensions in mm		

Mechanical Data

- Case: DO-15, Molded Plastic
- Terminals: Plated Leads Solderable per MIL-STD-202, Method 208
- Polarity: Cathode Band
- Weight: 0.40 grams (approx.)
- Mounting Position: Any
- Marking: Type Number
- **Lead Free: For RoHS / Lead Free Version, Add "-LF" Suffix to Part Number, See Page 4**

Maximum Ratings and Electrical Characteristics @T_A=25℃ unless otherwise specified

Single Phase, half wave, 60Hz, resistive or inductive load.
For capacitive load, derate current by 20%.

Characteristic	Symbol	HER 151	HER 152	HER 153	HER 154	HER 155	HER 156	HER 157	HER 158	Unit
Peak Repetitive Reverse Voltage Working Peak Reverse Voltage DC Blocking Voltage	V_{RRM} V_{RWM} V_R	50	100	200	300	400	600	800	1000	V
RMS Reverse Voltage	$V_{R(RMS)}$	35	70	140	210	280	420	560	700	V
Average Rectified Output Current (Note 1) @T_A = 55℃	I_O	1.5								A
Non-Repetitive Peak Forward Surge Current 8.3ms Single half sine-wave superimposed on rated load (JEDEC Method)	I_{FSM}	50								A
Forward Voltage @I_F = 1.5A	V_{FM}	1.0				1.3	1.7			V
Peak Reverse Current @T_A = 25℃ At Rated DC Blocking Voltage @T_A = 100℃	I_{RM}	5.0 100								µA
Reverse Recovery Time (Note 2)	t_{rr}	50					75			nS
Typical Junction Capacitance (Note 3)	C_j	50					30			pF
Operating Temperature Range	T_j	-65 to +125								℃
Storage Temperature Range	T_{STG}	-65 to +150								℃

Note: 1. Leads maintained at ambient temperature at a distance of 9.5mm from the case
2. Measured with IF = 0.5A, IR = 1.0A, IRR = 0.25A. See figure 5.
3. Measured at 1.0 MHz and applied reverse voltage of 4.0V D.C.

© 2006 Won-Top Electronics

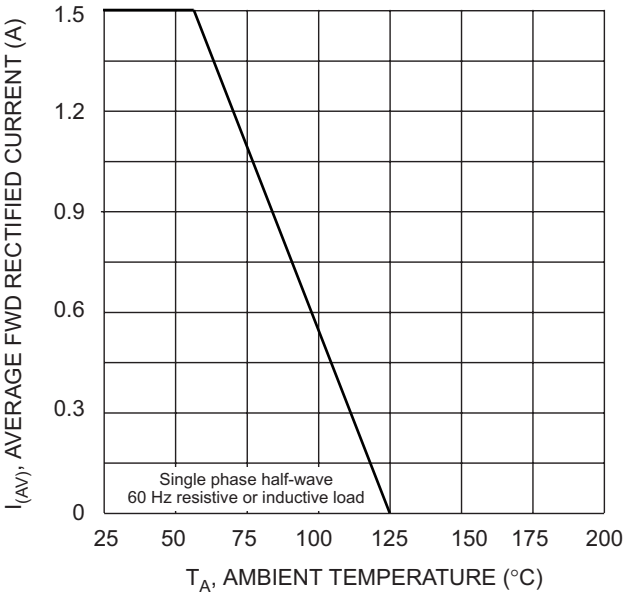

Fig. 1 Forward Current Derating Curve

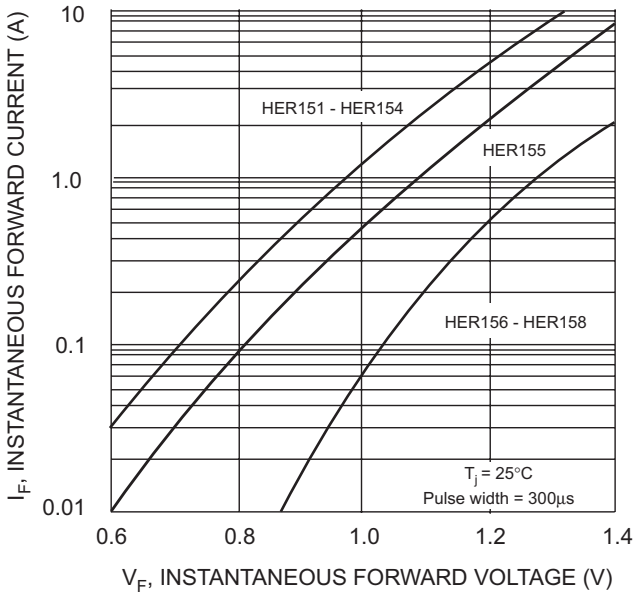

Fig. 2 Typical Forward Characteristics

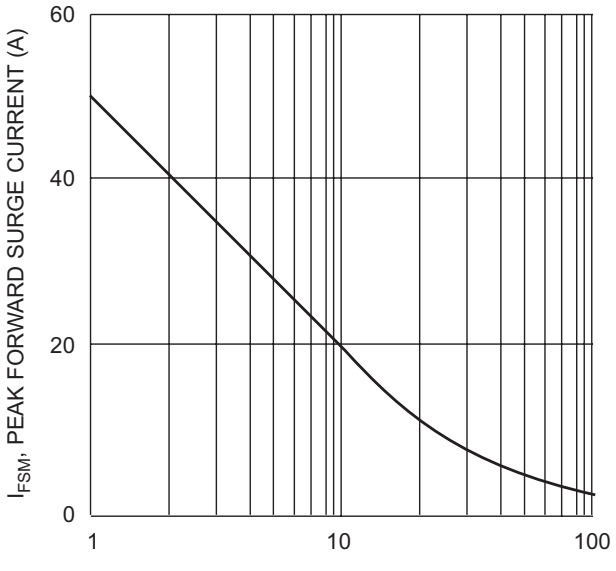

Fig. 3 Peak Forward Surge Current

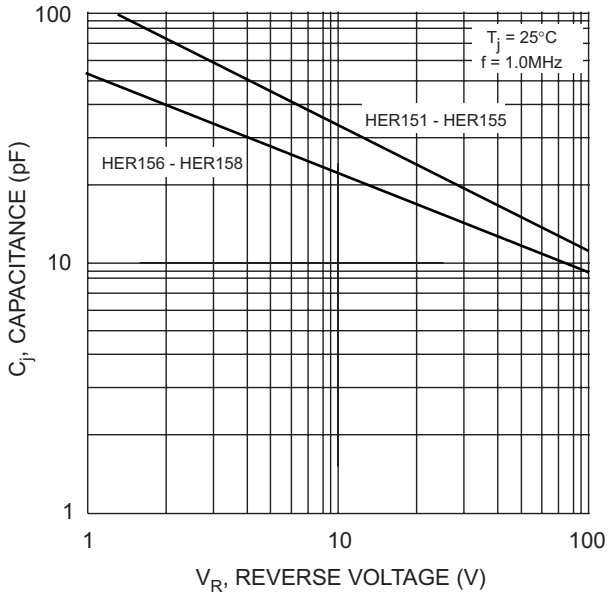

Fig. 4 Typical Junction Capacitance

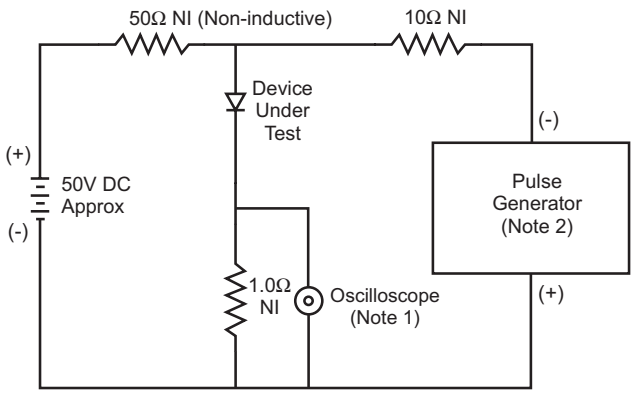

Notes:
1. Rise Time = 7.0ns max. Input Impedance = 1.0MΩ, 22pF.
2. Rise Time = 10ns max. Input Impedance = 50Ω.

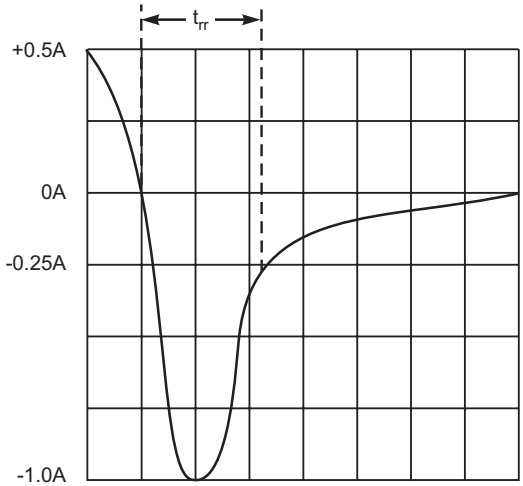

Set time base for 5/10ns/cm

Fig. 5 Reverse Recovery Time Characteristic and Test Circuit

 © 2006 Won-Top Electronics

MARKING INFORMATION

Cathode	= Polarity Band
HER15x	= Device Number
x	= 1, 2, 3, 4, 5, 6, 7 or 8
WTE	= Manufacturer's Logo

TAPING SPECIFICATIONS

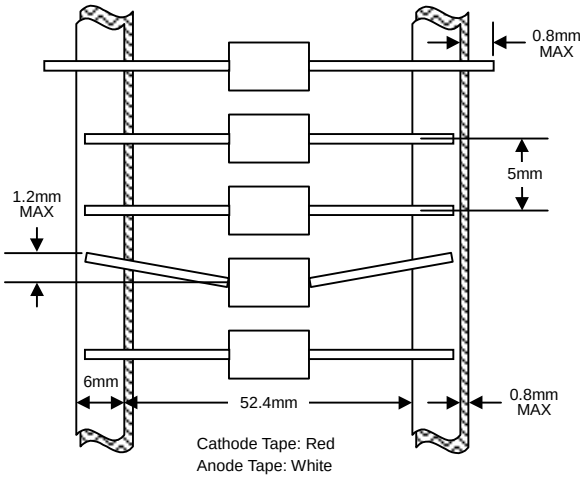

PACKAGING INFORMATION

TAPE & REEL

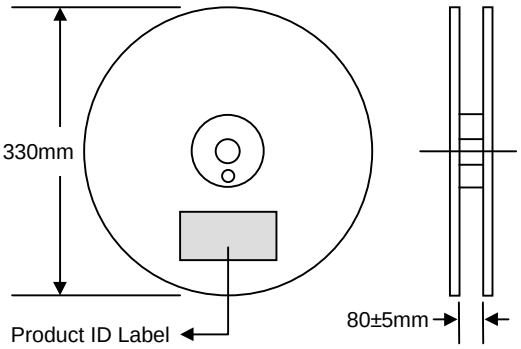

TAPE & BOX

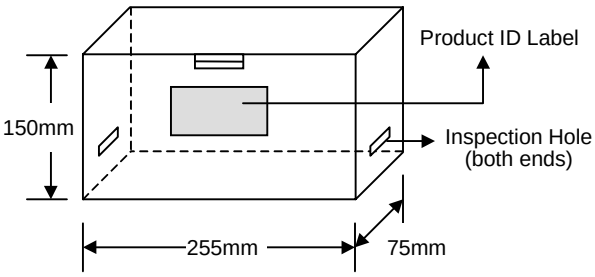

BULK

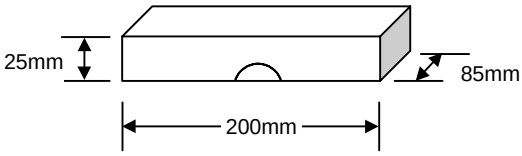

Packaging	Reel Diameter / Box Size (mm)	Quantity (PCS)	Carton Size (mm)	Quantity (PCS)	Approx. Gross Weight (KG)
TAPE & REEL	330	4,000	370 x 370 x 420	20,000	12.0
TAPE & BOX	255 x 75 x 150	3,000	400 x 273 x 415	30,000	15.0
BULK	200 x 85 x 25	1,000	459 x 214 x 256	40,000	17.5

Note: 1. Paper reel, white or gray color. Core material: plastic or metal.
2. Components are packed in accordance with EIA standard RS-296-E.

 © 2006 Won-Top Electronics

ORDERING INFORMATION

Product No.	Package Type	Shipping Quantity
HER151-T3	DO-15	4000/Tape & Reel
HER151-TB	DO-15	3000/Tape & Box
HER151	DO-15	1000 Units/Box
HER152-T3	DO-15	4000/Tape & Reel
HER152-TB	DO-15	3000/Tape & Box
HER152	DO-15	1000 Units/Box
HER153-T3	DO-15	4000/Tape & Reel
HER153-TB	DO-15	3000/Tape & Box
HER153	DO-15	1000 Units/Box
HER154-T3	DO-15	4000/Tape & Reel
HER154-TB	DO-15	3000/Tape & Box
HER154	DO-15	1000 Units/Box
HER155-T3	DO-15	4000/Tape & Reel
HER155-TB	DO-15	3000/Tape & Box
HER155	DO-15	1000 Units/Box
HER156-T3	DO-15	4000/Tape & Reel
HER156-TB	DO-15	3000/Tape & Box
HER156	DO-15	1000 Units/Box
HER157-T3	DO-15	4000/Tape & Reel
HER157-TB	DO-15	3000/Tape & Box
HER157	DO-15	1000 Units/Box
HER158-T3	DO-15	4000/Tape & Reel
HER158-TB	DO-15	3000/Tape & Box
HER158	DO-15	1000 Units/Box

1. Products listed in **bold** are WTE **Preferred** devices.
2. Shipping quantity given is for minimum packing quantity only. For minimum order quantity, please consult the Sales Department.
3. **To order RoHS / Lead Free version (with Lead Free finish), add "-LF" suffix to part number above. For example, HER151-TB-LF**.

Won-Top Electronics Co., Ltd (WTE) has checked all information carefully and believes it to be correct and accurate. However, WTE cannot assume any responsibility for inaccuracies. Furthermore, this information does not give the purchaser of semiconductor devices any license under patent rights to manufacturer. WTE reserves the right to change any or all information herein without further notice.

WARNING: DO NOT USE IN LIFE SUPPORT EQUIPMENT. WTE power semiconductor products are not authorized for use as critical components in life support devices or systems without the express written approval.

Won-Top Electronics Co., Ltd.
No. 44 Yu Kang North 3rd Road, Chine Chen Dist., Kaohsiung, Taiwan
Phone: 886-7-822-5408 or 886-7-822-5410
Fax: 886-7-822-5417
Email: sales@wontop.com
Internet: http://www.wontop.com

We power your everyday.

 © 2006 Won-Top Electronics