FR301 – FR307

3.0A FAST RECOVERY DIODE

Features

- Diffused Junction
- Low Forward Voltage Drop
- High Current Capability
- High Reliability
- High Surge Current Capability

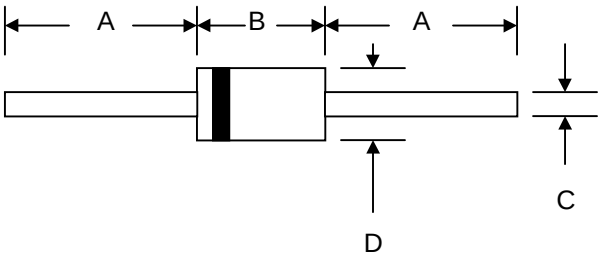

DO-201AD		
Dim	**Min**	**Max**
A	25.4	—
B	7.20	9.50
C	1.20	1.30
D	4.80	5.30
All Dimensions in mm		

Mechanical Data

- Case: DO-201AD, Molded Plastic
- Terminals: Plated Leads Solderable per MIL-STD-202, Method 208
- Polarity: Cathode Band
- Weight: 1.2 grams (approx.)
- Mounting Position: Any
- Marking: Type Number
- **Lead Free: For RoHS / Lead Free Version, Add "-LF" Suffix to Part Number, See Page 4**

Maximum Ratings and Electrical Characteristics @T_A=25℃ unless otherwise specified

Single Phase, half wave, 60Hz, resistive or inductive load.
For capacitive load, derate current by 20%.

Characteristic	Symbol	FR301	FR302	FR303	FR304	FR305	FR306	FR307	Unit
Peak Repetitive Reverse Voltage Working Peak Reverse Voltage DC Blocking Voltage	V_{RRM} V_{RWM} V_R	50	100	200	400	600	800	1000	V
RMS Reverse Voltage	$V_{R(RMS)}$	35	70	140	280	420	560	700	V
Average Rectified Output Current (Note 1) @T_A = 55℃	I_O	3.0							A
Non-Repetitive Peak Forward Surge Current 8.3ms Single half sine-wave superimposed on rated load (JEDEC Method)	I_{FSM}	150							A
Forward Voltage @I_F = 3.0A	V_{FM}	1.2							V
Peak Reverse Current @T_A = 25℃ At Rated DC Blocking Voltage @T_A = 100℃	I_{RM}	10 150							µA
Reverse Recovery Time (Note 2)	t_{rr}	150				250	500		nS
Typical Junction Capacitance (Note 3)	C_j	60							pF
Operating Temperature Range	T_j	-65 to +125							℃
Storage Temperature Range	T_{STG}	-65 to +150							℃

Note: 1. Leads maintained at ambient temperature at a distance of 9.5mm from the case
2. Measured with IF = 0.5A, IR = 1.0A, IRR = 0.25A. See figure 5.
3. Measured at 1.0 MHz and applied reverse voltage of 4.0V D.C.

© 2006 Won-Top Electronics

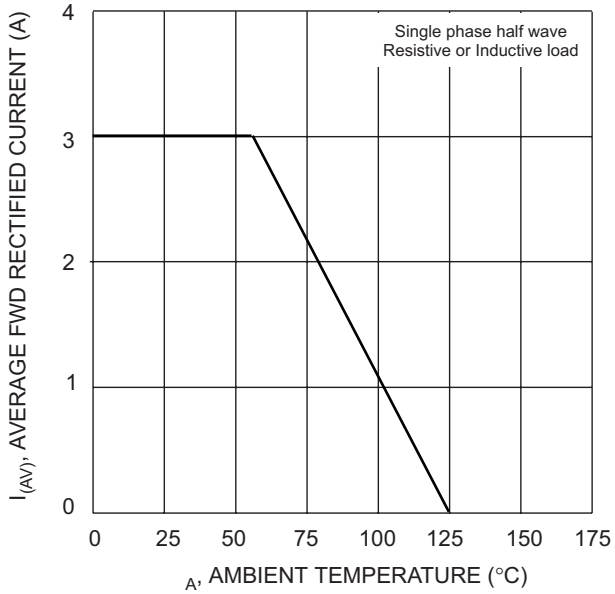

Fig. 1 Forward Derating Curve

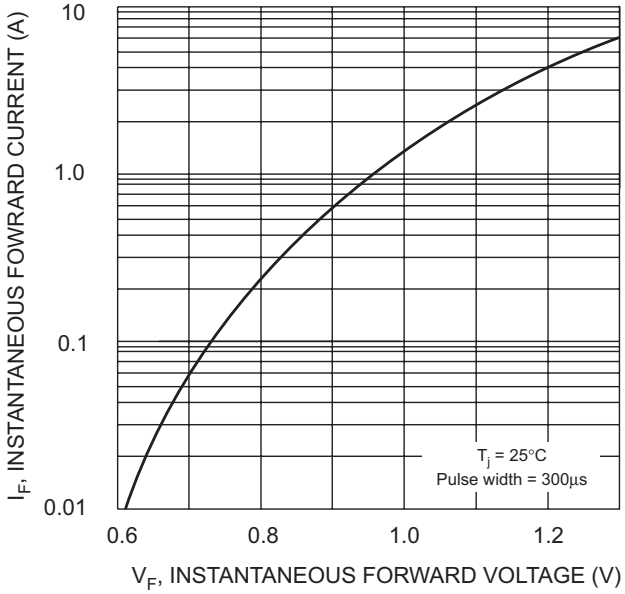

Fig. 2 Typical Forward Characteristics

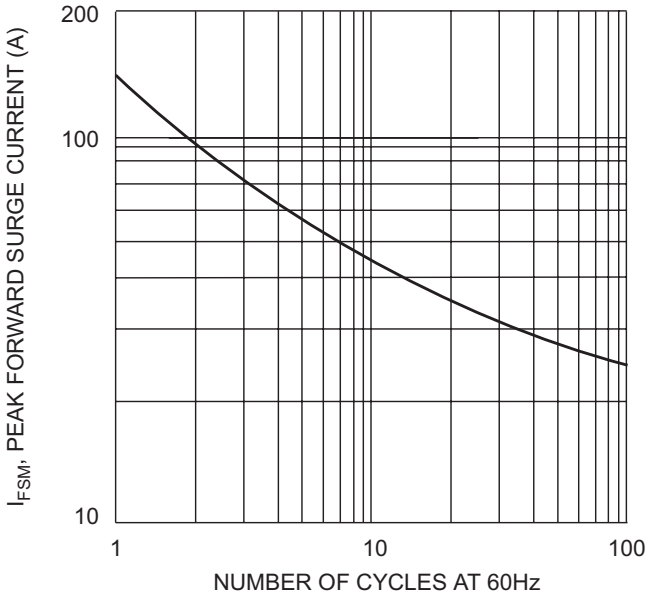

Fig. 3 Peak Forward Surge Current

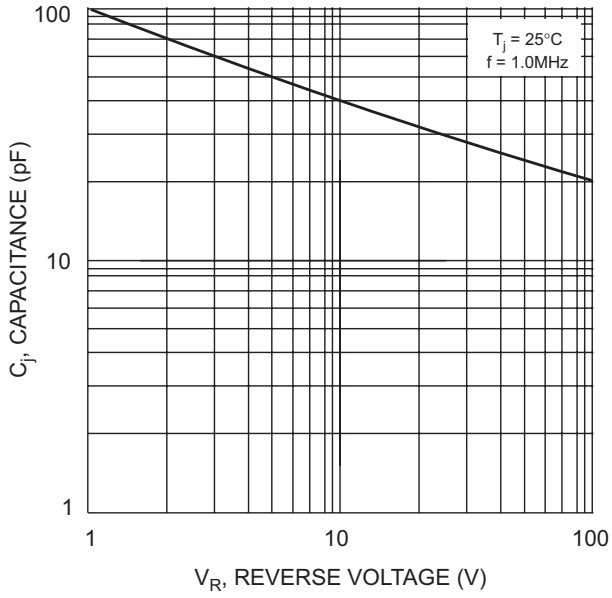

Fig. 4 Typical Junction Capacitance

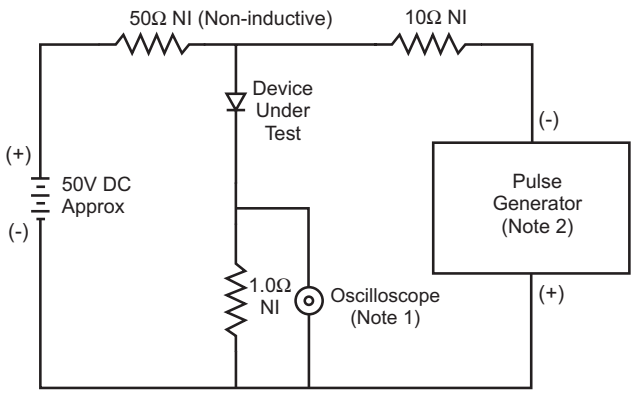

Notes:
1. Rise Time = 7.0ns max. Input Impedance = 1.0MΩ, 22pF.
2. Rise Time = 10ns max. Input Impedance = 50Ω.

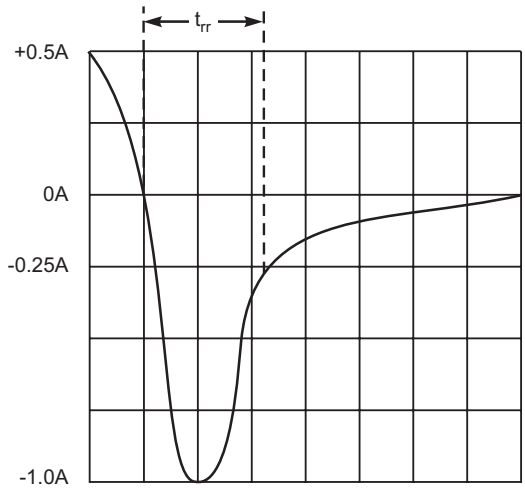

Set time base for 5/10ns/cm

Fig. 5 Reverse Recovery Time Characteristic and Test Circuit

 © 2006 Won-Top Electronics

MARKING INFORMATION

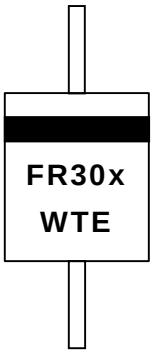

Cathode	= Polarity Band
FR30x	= Device Number
x	= 1, 2, 3, 4, 5, 6 or 7
WTE	= Manufacturer's Logo

TAPING SPECIFICATIONS

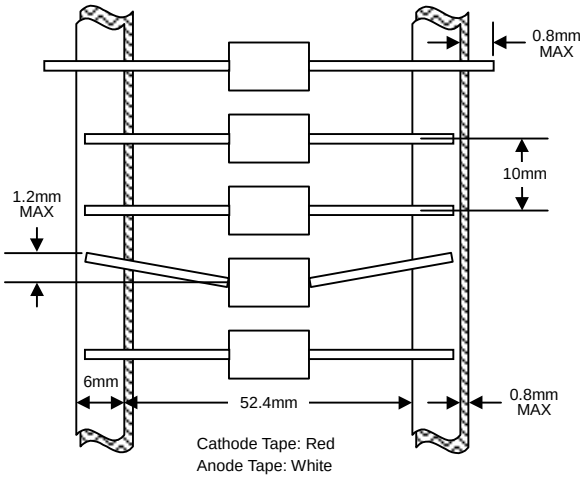

PACKAGING INFORMATION

TAPE & REEL

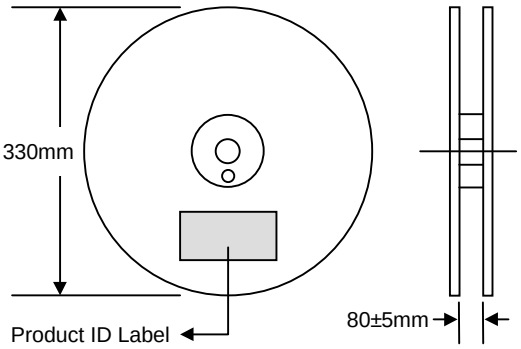

TAPE & BOX

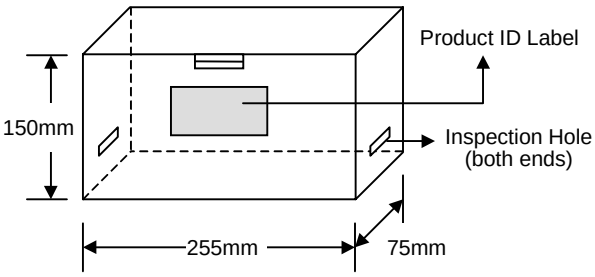

BULK

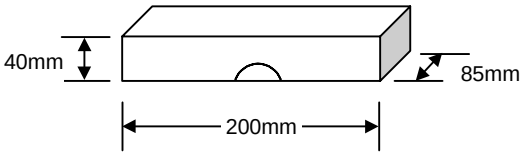

Packaging	Reel Diameter / Box Size (mm)	Quantity (PCS)	Carton Size (mm)	Quantity (PCS)	Approx. Gross Weight (KG)
TAPE & REEL	330	1,200	370 x 370 x 420	6,000	10.0
TAPE & BOX	255 x 75 x 150	1,200	400 x 273 x 415	12,000	17.0
BULK	200 x 85 x 40	500	459 x 214 x 256	12,500	16.0

Note: 1. Paper reel, white or gray color. Core material: plastic or metal.
2. Components are packed in accordance with EIA standard RS-296-E.

 © 2006 Won-Top Electronics

ORDERING INFORMATION

Product No.	Package Type	Shipping Quantity
FR301-T3	DO-201AD	1200/Tape & Reel
FR301-TB	DO-201AD	1200/Tape & Box
FR301	DO-201AD	500 Units/Box
FR302-T3	DO-201AD	1200/Tape & Reel
FR302-TB	DO-201AD	1200/Tape & Box
FR302	DO-201AD	500 Units/Box
FR303-T3	DO-201AD	1200/Tape & Reel
FR303-TB	DO-201AD	1200/Tape & Box
FR303	DO-201AD	500 Units/Box
FR304-T3	DO-201AD	1200/Tape & Reel
FR304-TB	DO-201AD	1200/Tape & Box
FR304	DO-201AD	500 Units/Box
FR305-T3	DO-201AD	1200/Tape & Reel
FR305-TB	DO-201AD	1200/Tape & Box
FR305	DO-201AD	500 Units/Box
FR306-T3	DO-201AD	1200/Tape & Reel
FR306-TB	DO-201AD	1200/Tape & Box
FR306	DO-201AD	500 Units/Box
FR307-T3	DO-201AD	1200/Tape & Reel
FR307-TB	DO-201AD	1200/Tape & Box
FR307	DO-201AD	500 Units/Box

1. Products listed in **bold** are WTE **Preferred** devices.
2. Shipping quantity given is for minimum packing quantity only. For minimum order quantity, please consult the Sales Department.
3. **To order RoHS / Lead Free version (with Lead Free finish), add "-LF" suffix to part number above. For example, FR301-TB-LF**.

Won-Top Electronics Co., Ltd (WTE) has checked all information carefully and believes it to be correct and accurate. However, WTE cannot assume any responsibility for inaccuracies. Furthermore, this information does not give the purchaser of semiconductor devices any license under patent rights to manufacturer. WTE reserves the right to change any or all information herein without further notice.

WARNING: DO NOT USE IN LIFE SUPPORT EQUIPMENT. WTE power semiconductor products are not authorized for use as critical components in life support devices or systems without the express written approval.

Won-Top Electronics Co., Ltd.
No. 44 Yu Kang North 3rd Road, Chine Chen Dist., Kaohsiung, Taiwan
Phone: 886-7-822-5408 or 886-7-822-5410
Fax: 886-7-822-5417
Email: sales@wontop.com
Internet: http://www.wontop.com

We power your everyday.

 © 2006 Won-Top Electronics