NPM Nippon Pulse
Your Partner in Motion Control

Tin-Can Steppers
Gearhead Specs
PF35/PF35T

Dimensions of Geared Model

PF35 w/H Gear Head

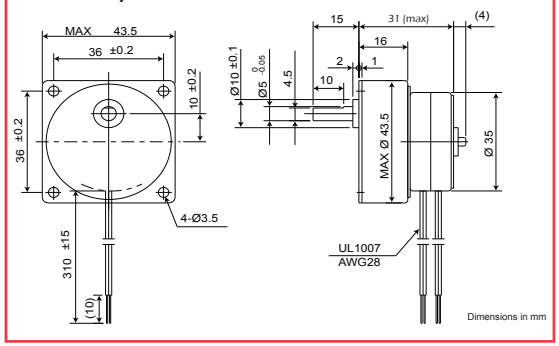

Dimensions of Geared Model

PF35(T) w/M Gear Head

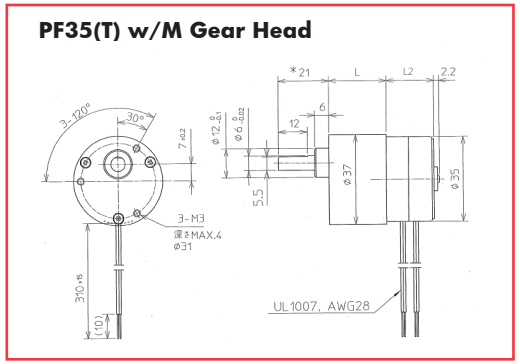

	L2
PF35	19.8
PF35T	14.2

Ratios of Geared Model

Gear Ratio	6/25	1/5	3/25	1/10
Ordinary Torque	200mN·m			
Destruction Torque	600mN·m			

Gear Ratio	2/25	1/15	3/50	1/20	1/25
Ordinary Torque	250mN·m				
Destruction Torque	750mN·m				

Gear Ratio	1/30	1/50	1/60	2/125	1/75
Ordinary Torque	300mN·m				
Destruction Torque	900mN·m				

Gear Ratio	1/100	1/120	1/125	1/150	1/200	1/250	1/300
Ordinary Torque	400mN·m						
Destruction Torque	1800mN·m						

Ratios of Geared Model

Gear Ratio	1/5	1/6	1/10	1/18	1/30
Ordinary Torque	100mN·m			200mN·m	
Destruction Torque	300mN·m			600mN·m	

Gear Ratio	1/40	1/50	1/60	1/75	1/90	1/100	1/120
Ordinary Torque	300mN·m						
Destruction Torque	900mN·m						

Gear Ratio	1/125	1/150	1/180	1/200	1/270	1/300
Ordinary Torque	600mN·m					
Destruction Torque	1800mN·m					

Gear Ratio	1/5	1/6	1/10	1/18	1/30	1/40	1/50	1/60	1/75	1/90	1/100	1/120	1/125	1/150	1/180	1/200	1/270	1/300
L	19.5	19.5	19.5	19.5	21.7	21.7	21.7	21.7	21.7	21.7	21.7	21.7	23.8	23.8	23.8	23.8	23.8	23.8