SIGN	DATE	DESCRIPTION	APPROVER

THIS IS CAD DRAWING, DO NOT REVISE MANUALLY!!!

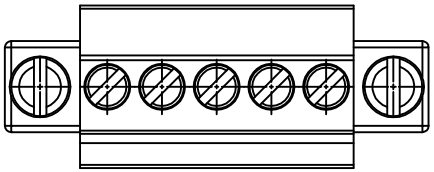

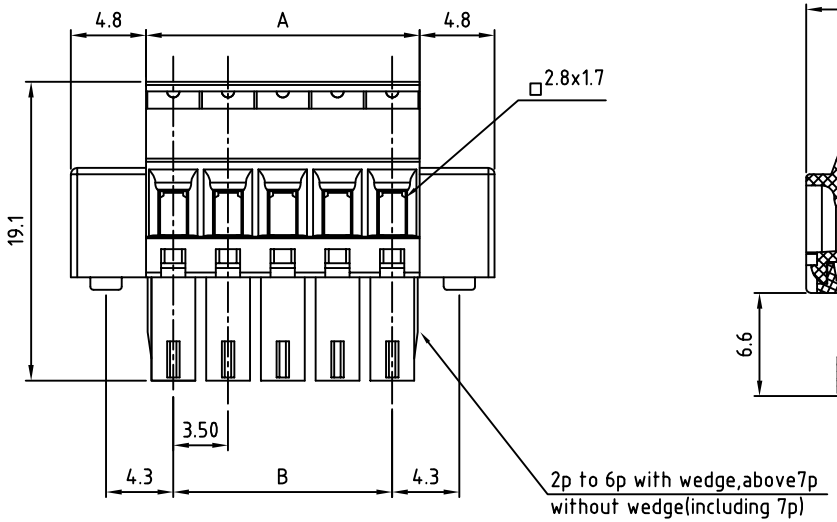

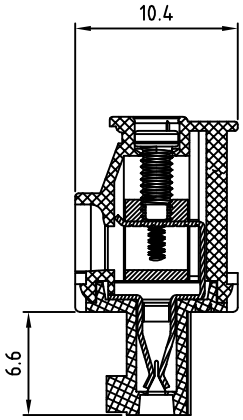

Material

- Terminal body
  (metal housing): Brass(CuZn)
- Terminal screw: Steel Zinc plating "-" slot type
- With flange screw : steel M2.5
- Wire guard: PhBz Tin plated
- Insulator (housing): Thermoplastic (UL94V-0)

Electrical cULus/VDE

- Voltage rating: 300V/300V
- Current rating: 8A /10A
- Wire range: 1.5mm²
  Solid wire(AWG): 16-28
  Stranded wire(AWG): 16-28
- Torque: 1.7Lb-In / 0.2N.m
- Screw: M2
- Wire strip length: 6-7mm
- Withstanding Voltage: 1.6KV / 2.5KV
- Operating temperature: -30° C to +105° C
- Safety approval:
  RoHS Compliant

PART NUMBER:

OSTTSXX115C

No. of Poles
- 02 2 Poles
- 03 3 Poles
- ... ...
- 24 24 Poles

COLOR
- 0: Black
- 5: Green (Standard)
- 6: Blue
- 8: Grey

N = Number of poles

DIMENSION

A	NX3.5
B	(N-1)X3.5

THESE DRAWINGS AND SPECIFICATIONS ARE THE PROPERTY OF ON-SHORE TECHNOLOGY, INC. AND SHALL NOT BE REPRODUCED, COPIED OR USED IN ANY MANNER WITHOUT THE PRIOR WRITTEN CONSENT OF ON-SHORE TECHNOLOGY, INC.

ON-SHORE TECHNOLOGY, INC.

TITLE	OSTTS-3.5mm Series With flange (w/latching hooks on the wire entry side)				
PART NO.	OSTTSXX115C			DWG NO.	OSTTSXX115C.DWG
APPROVED	CHECKED	DESIGNED	DRAWN	CUST NO.	
Shi Jun 2006.10.25	Marvin 2005.10.25	Marvin 2005.10.25	Marvin 2005.10.25	UNIT: mm SCALE: NONE SHEET: 01/01 REV.: D	

Tolerance	
X.	±0.50
X.X	±0.30
X.XX	±0.10
X°	±1°