DESCRIPTION: **COAXIAL / SIGNAL - RIGHT ANGLE - FEMALE**

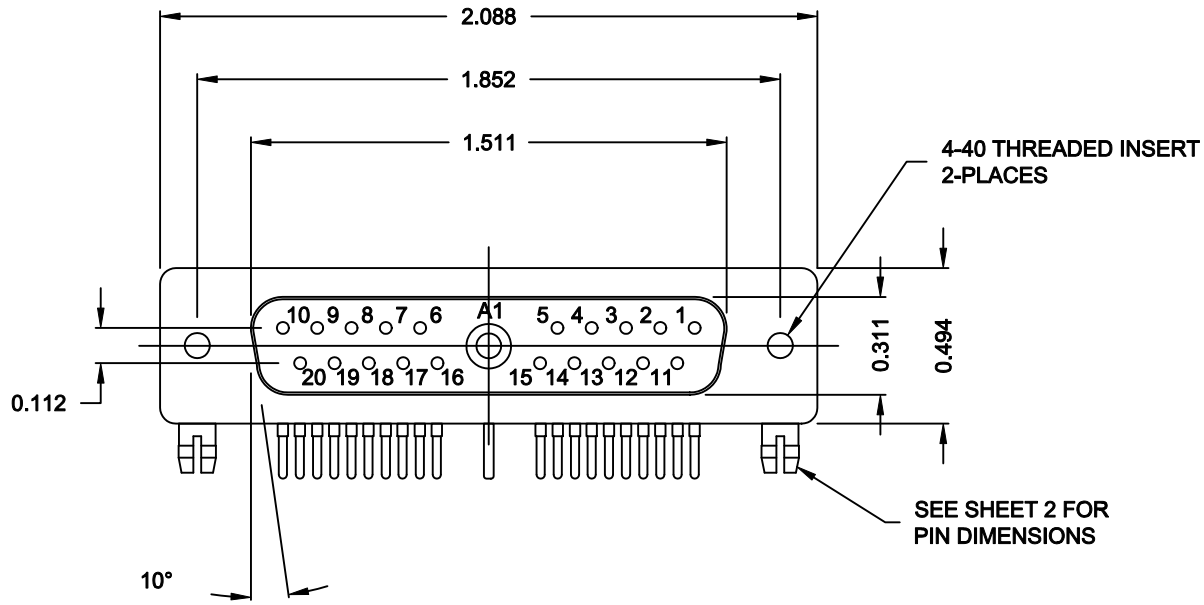

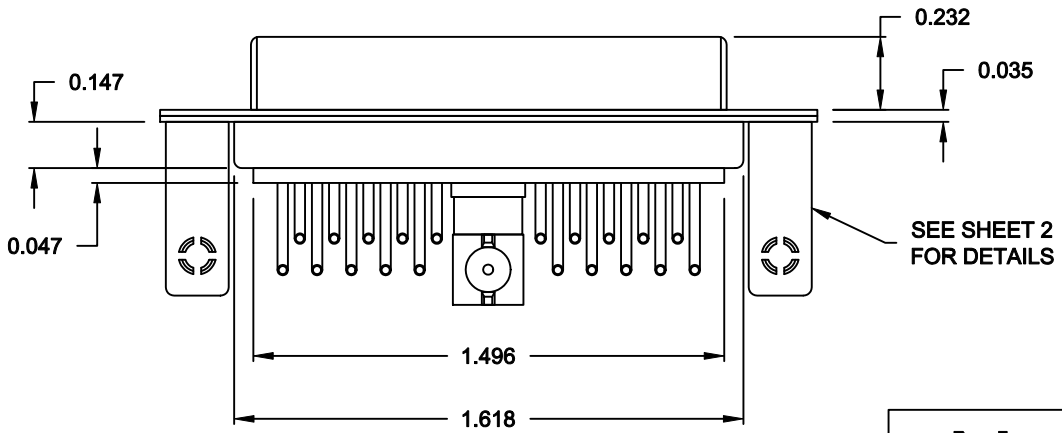

SPECIFICATIONS:

ELECTRICAL:

INSULATOR RESISTANCE:	5,000 MegOHMS Min.
DIELECTRIC WITHSTANDING:	1,000VAC r.m.s.
OPERATING TEMPERATURE:	-55° C ~ +125° C
CONTACT RESISTANCE:	30 MilliOHMS Max.
COAXIAL PINS:	50 OHM
SIGNAL PINS:	5 AMPS

MECHANICAL:

CONTACT INSERTION FORCE:	4.5 Kg Max.
CONTACT SEPARATOR FORCE:	0.3Kg Min.

MATERIALS:

CONTACTS:	BRASS
INSULATOR:	PBT UL94V-0 RATED, 230°C PROCESS TEMP.
SHELL:	STEEL

FINISH:

SHELL:	NICKEL

68521W1203L461

46 = 4-40 INSERTS / BOARD LOCKS

RoHS COMPLIANT

THESE DRAWINGS AND SPECIFICATIONS ARE THE PROPERTY OF NorComp AND SHALL NOT BE REPRODUCED, COPIED OR USED AS THE BASIS FOR THE MANUFACTURE OR SALE OF APPARATUS WITHOUT WRITTEN PERMISSION.

DRAWN: C. SMITH		DATE: 10-11-06	
CHECKED:		DATE:	
SCALE: 1.5 = 1	SHEET 1 OF 2		REV 2
DWG NO. 68521W1203L461			

NorComp

DESCRIPTION: 685 SERIES CONTACTS

NOTE:
POWER CONTACTS COME
PRE-LOADED INTO INSULATORS

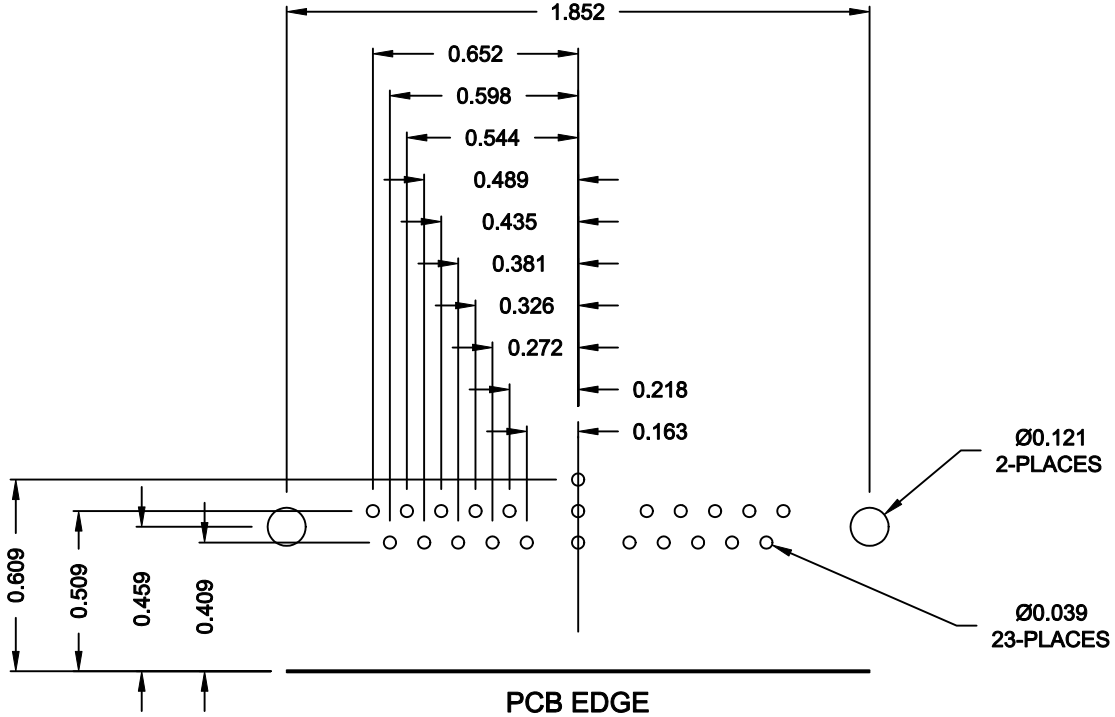

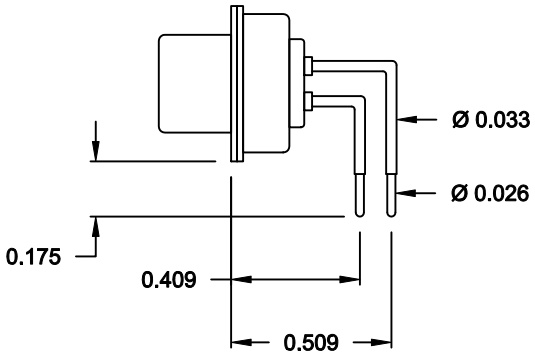

SIGNAL CONTACTS

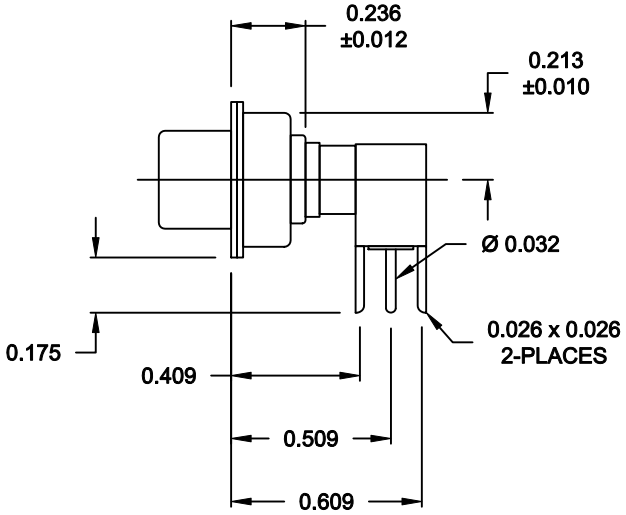

50 OHM COAXIAL CONTACT

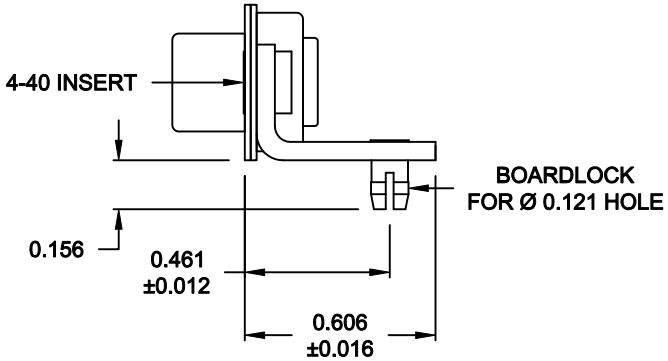

MOUNTING HARDWARE

RoHS COMPLIANT

THESE DRAWINGS AND SPECIFICATIONS ARE THE PROPERTY OF NorComp AND SHALL NOT BE REPRODUCED, COPIED OR USED AS THE BASIS FOR THE MANUFACTURE OR SALE OF APPARATUS WITHOUT WRITTEN PERMISSION.

DRAWN: C. SMITH	DATE: 10-11-06	
CHECKED:	DATE:	
SCALE: 1.5 = 1	SHEET 2 OF 2	REV 2
DWG NO. 68521W1203L461		

NorComp