REV.	DESCRIPTION/ECO NO.	DATE
	ENGR. RELEASE TO CAD	7/2/04

PERFORMANCE SPECIFICATIONS:

DESCRIPTION	SYM	MIN	TYP	MAX	UNITS
INPUT VOLTAGE	VIN	10.8	12.0	13.2	V DC
INPUT CURRENT	IIN	---	720	---	MA DC
OUTPUT VOLTAGE	VL	---	1000	---	V RMS
OUTPUT CURRENT	IL	6.0	7.0	8.0	MA RMS
OSC. FREQUENCY	FO	45.0	55.0	65.0	K HZ
PWM FREQUENCY	FPW	435	455	475	HZ

TESTED WITH 2 EACH 3MM X 240MM LAMPS, AT 25°C, VIN= 12.0V ± 0.1V.

ABSOLUTE MAXIMUM RATINGS:

MAXIMUM INPUT VOLTAGE: 16.0 VDC
MAXIMUM RELATIVE HUMIDITY: 90%

OPERATING CHARACTERISTICS:

INPUT VOLTAGE RANGE: 10.8V DC TO 13.2V DC
NOMINAL INPUT POWER: 10.0 WATTS
OUTPUT DIMMING RANGE (R MODE): 40% TO 100%
OPERATING TEMPERATURE RANGE: 0°C TO 60°
STORAGE TEMPERATURE RANGE: -20°C TO 70°C

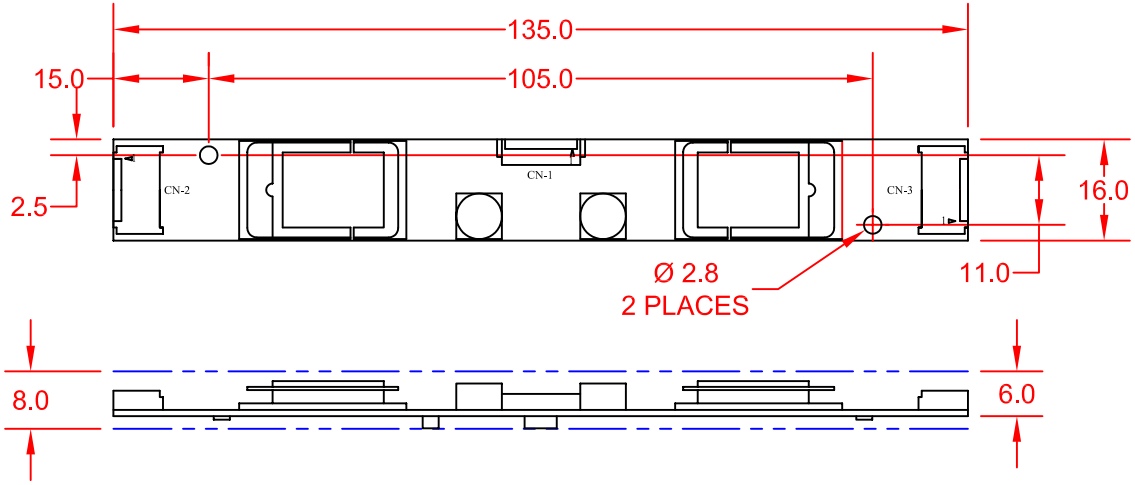

MATING CONNECTORS:

REF.	DESCRIPTION	PART NUMBER	MFG.
CN-1	INPUT HOUSING TERMINAL	 51021-0700 50079-8000	MOLEX
CN-1	INPUT HARNESS	 BXC-10630	JKL
CN-2 & CN-3	OUTPUT 1 & 2 HOUSING TERMINAL	 BHR-03VS-1 SBH-001T-P0.5	JST
CN-2 & CN-3	OUTPUT 1 & 2 HARNESS	 BXC-10643 (2 required)	JKL

WIRING DIAGRAM:

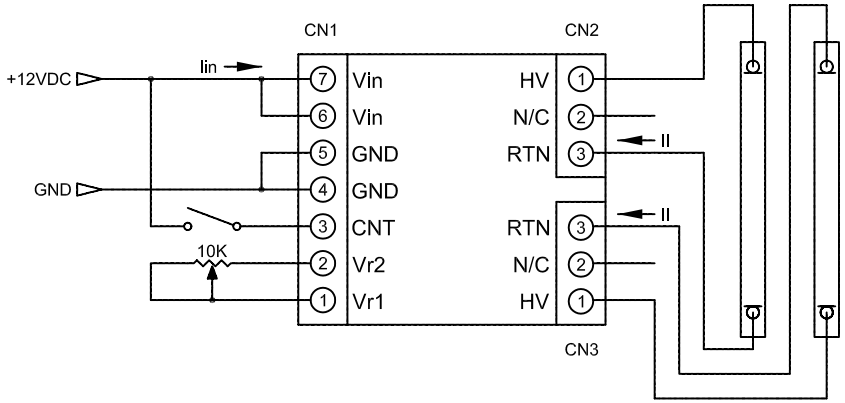

CONTROL FUNCTIONS:

CNT (INPUT PIN 3) IS USED AS AN INHIBIT FUNCTION, "GND" OR "OPEN" EQUALS OFF. "+V" EQUALS ON.

R MODE DIMMING: VR1 AND VR2 (INPUT PINS 1 AND 2) ARE USED TO PROVIDE, THE DIMMING FUNCTION, "0" OHMS EQUALS 100% LIGHT OUTPUT, "10K" OHMS EQUALS 40% LIGHT OUTPUT.

NOTE: THE SWITCH AND POTENTIOMETER SHOWN ON THE WIRING DIAGRAM ARE NOT A PART OF THE BXA-12613-7M INVERTER. THESE PARTS ARE AVAILABLE FROM MOST ELECTRONIC PARTS DISTRIBUTORS.

METRIC THIRD ANGLE PROJECTION	DIMENSIONS ARE IN MILLIMETERS TOLERANCE UNLESS OTHERWISE SPECIFIED 1 PL +/- REF. 2 PL +/- ANGLE +/- 0	JKL COMPONENTS CORPORATION				
		TITLE 12V DC INPUT, DUAL OUTPUT, DIMMING CCFL INVERTER				
DRAWN BY L. WENGSTROM	APPV'D BY J.K. DATE 7/2/04	SIZE A	FSCM NO. 55335	DRAWING NO. BXA-12613-7M		
- CAD DRAWING - MANUAL REVISIONS NOT PERMITTED		SCALE NONE		RELEASED DATE 7/2/04	REVISION DATE	REV. NO. / SHEET 1 OF 1