12mm X 4000mm SMD LIGHT RIBBON

Features

Voltage: 24V DC
Current: 1920mA
LED Viewing Angle (2 0-1/2): 120°
Standard Packaging:
4 Meter Reel (192 LED's)
Optional Packaging:
Individual 500mm Sections (24 LED's)
Order as ZFS-124000-XX/SEC
Note: Individual Sections ARE NOT supplied with insulated wire connections.

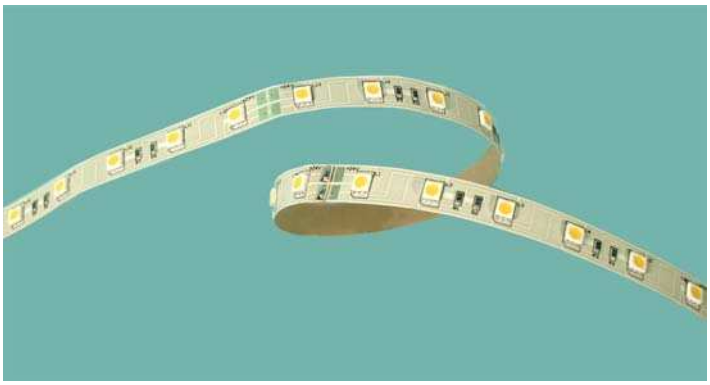

Dimensions

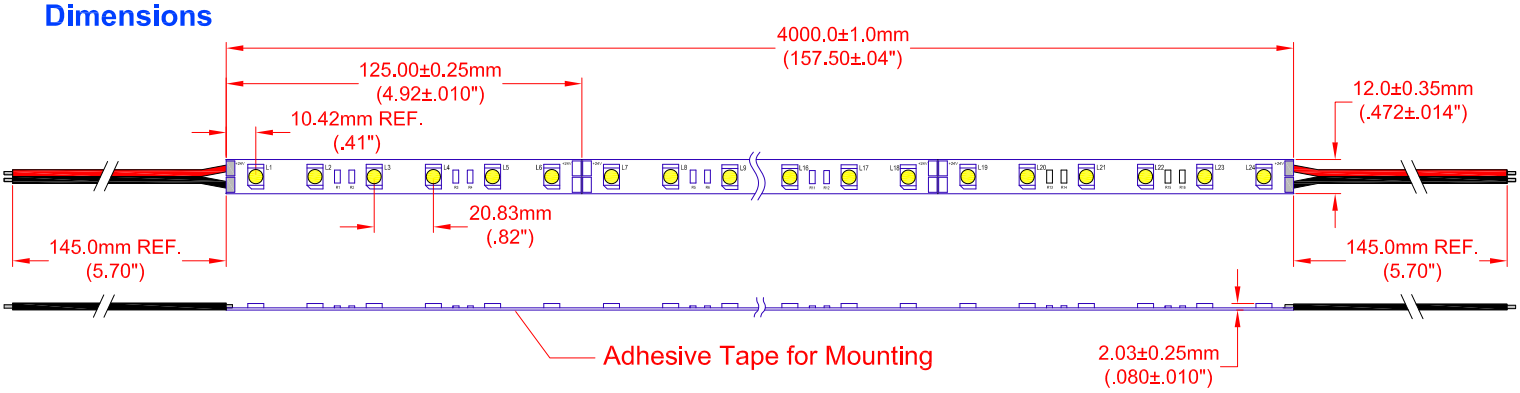

Electro-Optical Characteristics (T_J = 25°C)

Part Number	Color	Number of LEDs	InputVoltage (V DC)	Power (W)	Current (mA)	Radiance Angle (Deg.)	λd(nm)/ CCT(K)	Lumen Flux (lm)
ZFS-124000-CW	Cool White	192	24	46.08	1920	120	6000	2083
ZFS-124000-NW	Neutral White	192	24	46.08	1920	120	4100	1949
ZFS-124000-WW	Warm White	192	24	48.08	1920	120	3050	1640

Note: Flux is measured with an accuracy of +/- 10%.

Maximum Ratings

Parameter	Symbol	Rating	Units
LED Junction Temperature	T_J	125	°C
Operating Temperature	T_{opr}	-20 ~ +85	°C
Storage Temperature	T_{stg}	-20 ~ +100	°C
ESD Sensitivity	V_B	1000	V

ATTENTION

OBSERVE PRECAUTION
FOR HANDLING ELECTROSTATIC
DISCHARGE SENSITIVE DEVICES

REV. NO.	DESCRIPTION/ECO NUMBER	APPV'D DATE
B	ADD MATING COMPONENTS & PG 2	5/20/13
A	NEW LINE DRAWING	3/27/12
	RELEASE & CANCEL PL-1103-01	5/20/11

METRIC
THIRD ANGLE PROJECTION

DIMENSIONS ARE MILLIMETER (INCH)
TOLERANCE UNLESS OTHERWISE SPECIFIED
1 PL +/- REF.
2 PL +/- REF.
ANGLE +/- REF.

JKL COMPONENTS CORPORATION

TITLE: 12 X 4000mm, 20mm PITCH, WHITE LED FLEX RIBBON

DRAWN BY	APPV'D BY	DATE	SIZE	FSCM NO.	DRAWING NO.
L. WENGSTROM	L.R.	5/20/13	A	55335	ZFS-124000 MULTI

- CAD DRAWING -
MANUAL REVISIONS NOT PERMITTED

SCALE	RELEASED DATE	REVISION DATE	REV. NO.	SHEET
NONE	5/20/11	5/20/1	B	1 OF 2

Circuit Diagram

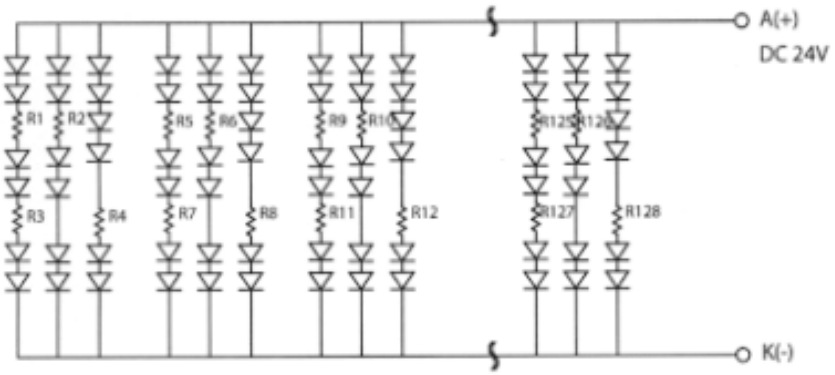

Accessories

ZPS-2435 OR ZPS-2460 MeanWell Power Supply

Mating Components

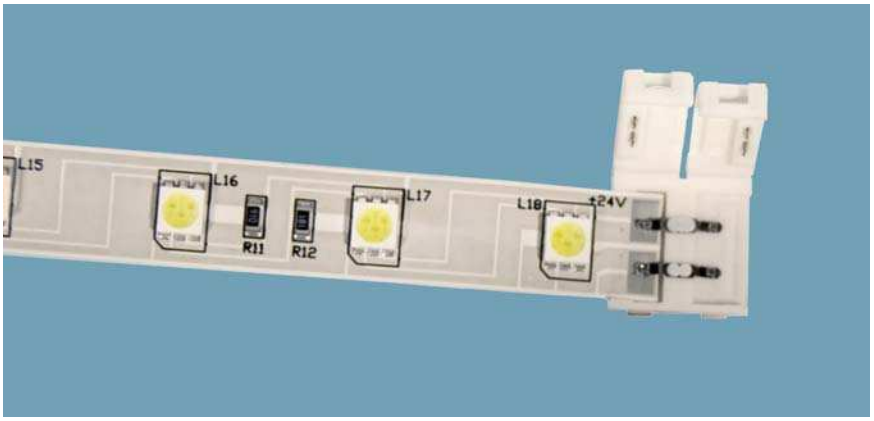

ZFS-CH0-12J
Flex to Flex Tape Connector

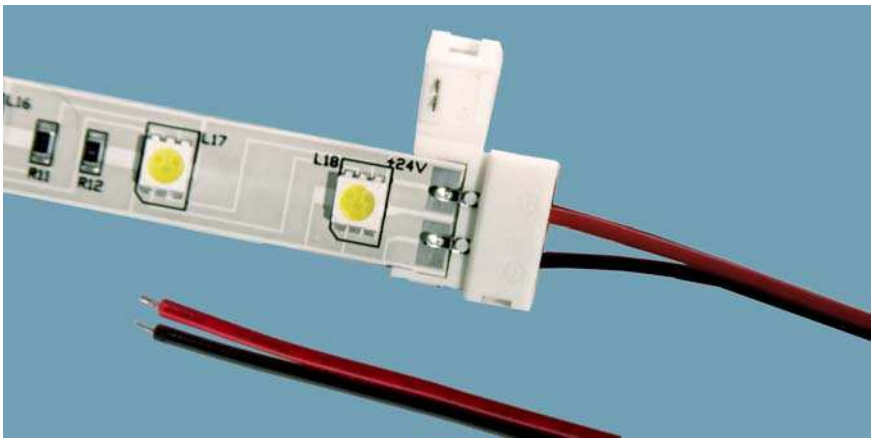

ZFS-CH144-12I
Flex Tape Input Connector

JKL COMPONENTS CORPORATION	DRAWING NO.	ZFS-124000 MULTI			
	RELEASED DATE 5/20/11	REVISION DATE 5/20/13	REV. NO. B	SHEET 2 OF 2	