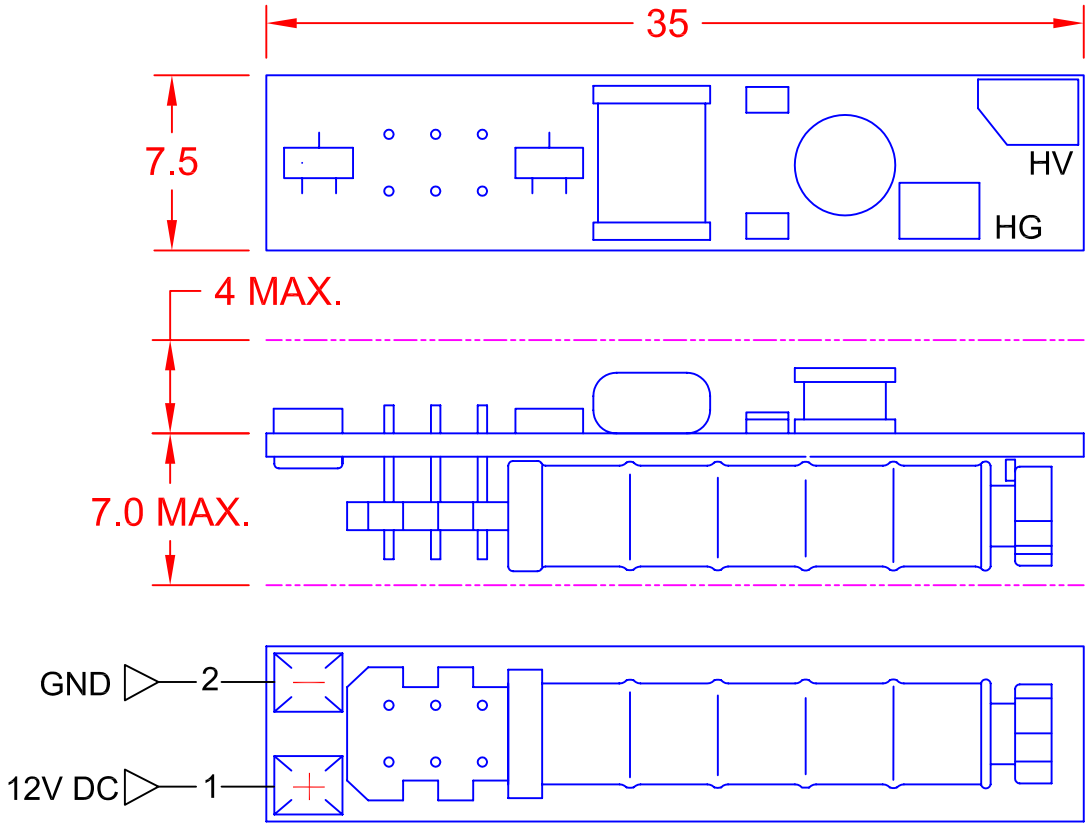

TOLERANCE	
L < 20	±0.2
20 ≦ L < 50	±0.3
50 ≦ L < 100	±0.4
100 ≦ L	±0.5

REV.	DESCRIPTION/ECO NO.	DATE
	RELEASED AS CAD DRW.	9/25/01
A	CHNG PER SUPPLIERS SPEC.	4/3/07

CHARACTERISTICS	MIN	TYP	MAX
INPUT VOLTAGE: (vdc)	10.8	12.0	15.0
INPUT CURRENT: (mA)	115	135	155
OUTPUT VOLTAGE: (Vrms)	-	800	-
OUTPUT CURRENT (maRms)	3.9	4.6	5.3
OUTPUT FREQUENCY: (kHz)	80	90	100
OPERATING TEMP: (CELSIUS)	0	25	50

BOARD PIN #	INPUT
1	+V (V in)
2	V (GND)
HV	V OUT
HG	OUT GND

M1 - INPUT CURRENT (I in)
M2 - INPUT VOLTAGE (V in)
M3 - OUTPUT CURRENT (I out)
M4 - OUTPUT VOLTAGE (V out)

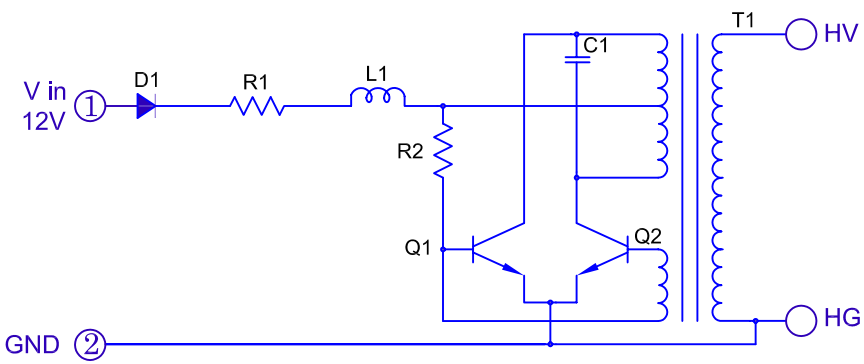

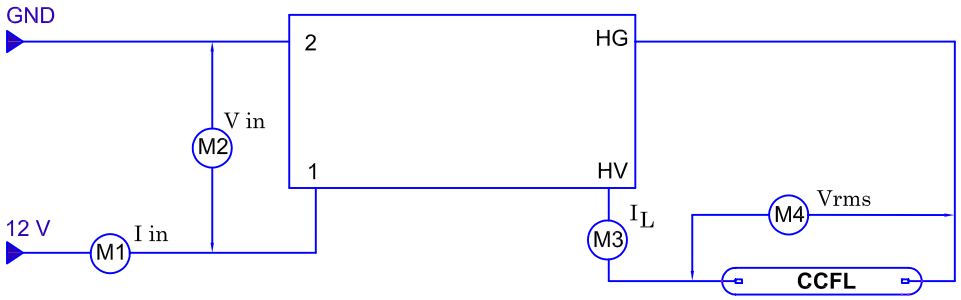

NOTE: RoHS COMPLIANT

METRIC THIRD ANGLE PROJECTION	DIMENSIONS ARE IN MILLIMETERS TOLERANCE UNLESS OTHERWISE SPECIFIED 1 PL +/- 0.2 2 PL +/- ANGLE +/- 0	JKL COMPONENTS CORPORATION				
		TITLE 12V CCFL POWER SUPPLY				
DRAWN BY L. WENGSTROM	APPV'D BY L.R. DATE 4/3/07	SIZE A	FSCM NO. 55335	DRAWING NO. BXA-12577		
- CAD DRAWING - MANUAL REVISIONS NOT PERMITTED		SCALE NONE	RELEASED DATE 9/25/01	REVISION DATE 4/3/07	REV. NO. A	SHEET OF