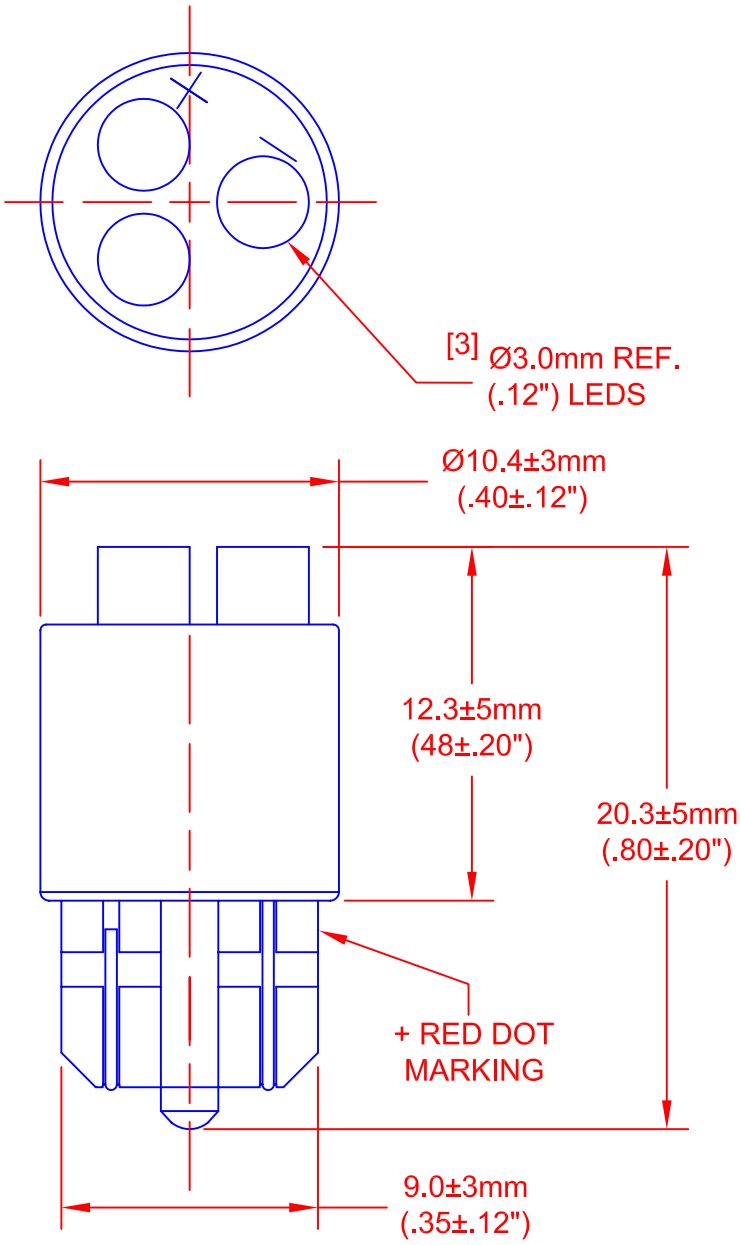

TYPICAL ELECTRICAL & OPTICAL OPERATING CHARACTERISTICS
(Ta = 25 degree C)

PART NUMBER	EMITTING COLOR	AMPERAGE mA	VOLTAGE Vdc	LUMINOUS INTENSITY Lm	CRI %	CCT DEGREE K	VIEWING ANGLE DEGREES
LE-0903-04W	WHITE	20	24.0	22	79	6800	120

JKL PART NO.: LE-0903-04W

REV. NO.	DESCRIPTION/ECO NUMBER	APPV'D DATE
	RELEASED	12/1/09

METRIC
THIRD ANGLE PROJECTION

DIMENSIONS ARE IN MILLIMETERS (INCH)
TOLERANCE UNLESS OTHERWISE SPECIFIED
1 PL +/- REF.
2 PL +/- REF.
ANGLE +/-

JKL COMPONENTS CORPORATION

TITLE: 3 LEDS WEDGE BASE LAMP

DRAWN BY	APPV'D BY	DATE	SIZE	FSCM NO.	DRAWING NO.
L. WENGSTROM	L.R.	12/1/09	A	55335	LE-0903-04W

- CAD DRAWING -
MANUAL REVISIONS NOT PERMITTED

SCALE	RELEASED DATE	REVISION DATE	REV. NO.	SHEET
NONE	12/1/09			1 OF 1