AOZ1233-01

28V/8A Synchronous EZBuck™ Regulator

General Description

The AOZ1233-01 is a high-efficiency, easy-to-use DC/DC synchronous buck regulator that operates up to 28V. The device is capable of supplying 8A of continuous output current with an output voltage adjustable down to 0.8V (±1.0%).

The AOZ1233-01 integrates an internal linear regulator to generate 5.3V V_{CC} from input. If input voltage is lower than 5.3V, the linear regulator operates at low drop-output mode, which allows the V_{CC} voltage is equal to input voltage minus the drop-output voltage of the internal linear regulator.

A proprietary constant on-time PWM control with input feed-forward results in ultra-fast transient response while maintaining relatively constant switching frequency over the entire input voltage range. The switching frequency can be externally programmed up to 1MHz.

The device features multiple protection functions such as V_{CC} under-voltage lockout, cycle-by-current limit, output over-voltage protection, short-circuit protection, as well as thermal shutdown.

The AOZ1233-01 is available in a 5mm x 5mm QFN-30L package and is rated over a -40℃ to +85℃ ambient temperature range.

Features

- Wide input voltage range
  - 2.7V to 28V
- 8A continuous output current
- Output voltage adjustable down to 0.8V (±1.0%)
- Low $R_{DS(ON)}$ internal NFETs
  - 25mΩ high-side
  - 10mΩ low-side SR*FET*™
- Constant On-Time with input feed-forward
- Programmable frequency up to 1MHz
- Internal 5.3V/20mA linear regulator
- Ceramic capacitor stable
- Adjustable soft start
- Power Good output
- Integrated bootstrap diode
- Cycle-by-cycle current limit
- Short-circuit protection
- Thermal shutdown
- Thermally enhanced 5mm x 5mm QFN-30L package

Applications

- Portable computers
- Compact desktop PCs
- Servers
- Graphics cards
- Set-top boxes
- LCD TVs
- Cable modems
- Point-of-load DC/DC converters

Typical Application for V_{IN} = 12V or above

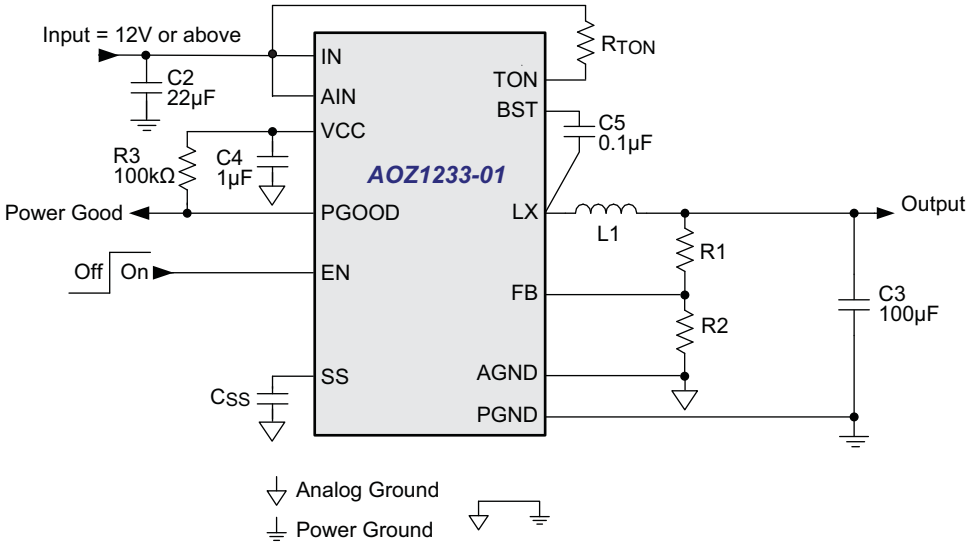

Typical Application for V_{IN} = 5V

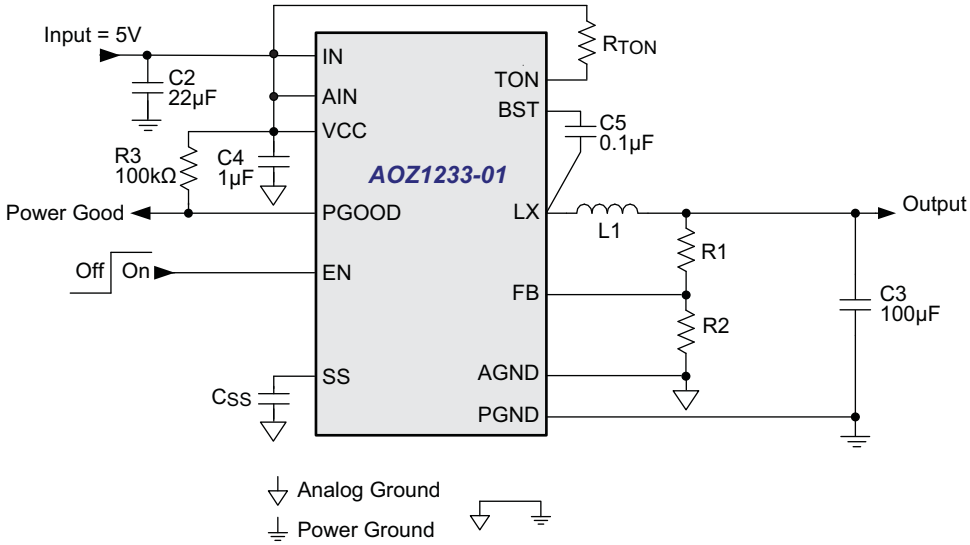

Typical Application for High Light Load Efficiency Requirement or V_{IN} = 2.7V ~ 6.5V

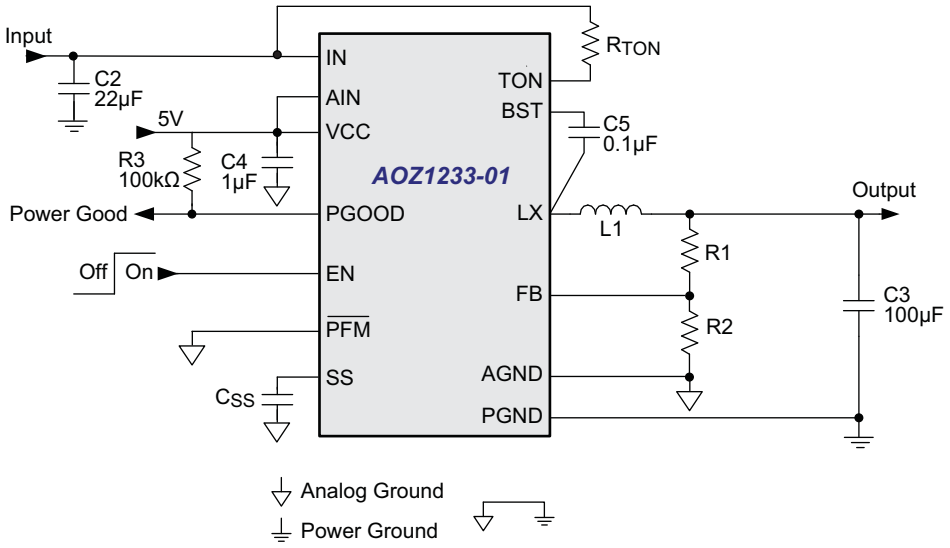

Ordering Information

Part Number	Ambient Temperature Range	Package	Environmental
AOZ1233QI-01	-40℃ to +85℃	30-Pin 5mm x 5mm QFN	Green Product

AOS Green Products use reduced levels of Halogens, and are also RoHS compliant.
Please visit www.aosmd.com/media/AOSGreenPolicy.pdf for additional information.

Pin Configuration

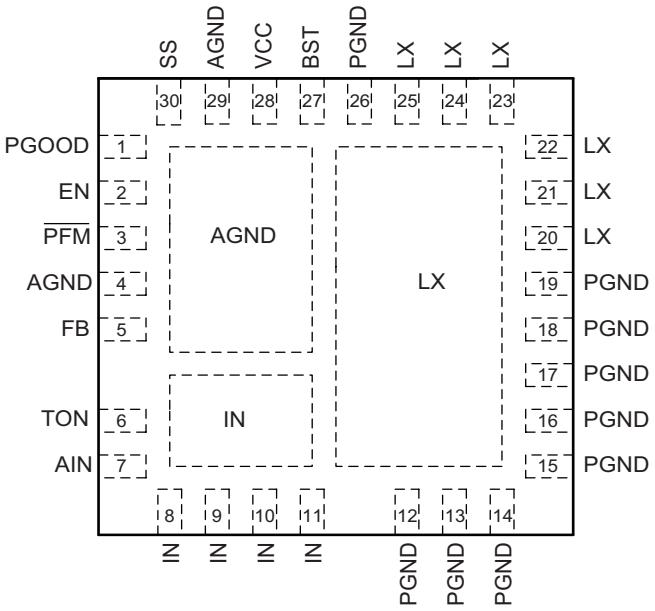

30-pin 5mm x 5mm QFN
(Top View)

Pin Description

Pin Number	Pin Name	Pin Function
1	PGOOD	Power Good Signal Output. PGOOD is an open-drain output used to indicate the status of the output voltage. It is internally pulled low when the output voltage is 10% lower than the nominal regulation voltage for 50µs (typical time) or 15% higher than the nominal regulation voltage. PGOOD is pulled low during soft-start and shut down.
2	EN	Enable Input. The AOZ1233-01 is enabled when EN is pulled high. The device shuts down when EN is pulled low.
3	$\overline{\text{PFM}}$	PFM Selection Input. Connect $\overline{\text{PFM}}$ pin to VCC/VIN for forced PWM operation. Connect $\overline{\text{PFM}}$ pin to ground for PFM operation to improve light load efficiency.
4, 29	AGND	Analog Ground.
5	FB	Feedback Input. Adjust the output voltage with a resistive voltage-divider between the regulator's output and AGND.
6	TON	On-Time Setting Input. Connect a resistor between VIN and TON to set the on time.
7	AIN	Supply Input for analog functions.
8, 9, 10, 11	IN	Supply Input. IN is the regulator input. All IN pins must be connected together.
12, 13, 14, 15, 16, 17, 18, 19, 26	PGND	Power Ground.
20, 21, 22, 23, 24, 25	LX	Switching Node.
27	BST	Bootstrap Capacitor Connection. The AOZ1233-01 includes an internal bootstrap diode. Connect an external capacitor between BST and LX as shown in the Typical Application diagrams.
28	VCC	Output for internal linear regulator. Bypass VCC to AGND with a 1µF ceramic capacitor. Place the capacitor close to VCC pin.
30	SS	Soft-Start Time Setting Pin. Connect a capacitor between SS and AGND to set the soft-start time.

Absolute Maximum Ratings

Exceeding the Absolute Maximum Ratings may damage the device.

Parameter	Rating
IN, AIN, TON, $\overline{PFM}$ to AGND	-0.3V to 30V
LX to AGND	-2V to 30V
BST to AGND	-0.3V to 36V
SS, PGOOD, FB, EN, V_{CC} to AGND	-0.3V to 6V
PGND to AGND	-0.3V to +0.3V
Junction Temperature (T_J)	+150℃
Storage Temperature (T_S)	-65℃ to +150℃
ESD Rating(1)	2kV

Note:

1. Devices are inherently ESD sensitive, handling precautions are required. Human body model rating: 1.5kΩ in series with 100pF.
2. LX to PGND Transient (t<20ns) ------ -7V to V_{IN} + 7V.

Maximum Operating Ratings

The device is not guaranteed to operate beyond the Maximum Operating ratings.

Parameter	Rating
Supply Voltage (V_{IN})	2.7V(1) to 28V
Output Voltage Range	0.8V to 0.85*V_{IN}
Ambient Temperature (T_A)	-40℃ to +85℃
Package Thermal Resistance	
HS MOSFET	25℃/W
LS MOSFET	20℃/W
PWM Controller	50℃/W

Note:

1. Connect V_{CC} and AIN to external 5V for V_{IN} = 2.7V ~ 6.5V application.

Electrical Characteristics

T_A = 25℃, V_{IN} = 12V, EN = 5V, unless otherwise specified. Specifications in **BOLD** indicate a temperature range of -40℃ to +85℃.

Symbol	Parameter	Conditions	Min.	Typ.	Max	Units
V_{IN}	IN Supply Voltage		**2.7**		**28**	V
V_{UVLO}	Under-Voltage Lockout Threshold of V_{cc}	V_{cc} rising V_{cc} falling	 **3.2**	**4.0** **3.7**	**4.4**	V
I_q	Quiescent Supply Current of V_{cc}	I_{OUT} = 0, V_{FB} = 1.0V, V_{EN} > 2V		**2**	**3**	mA
I_{OFF}	Shutdown Supply Current	V_{EN} = 0V		**1**	**20**	µA
V_{FB}	Feedback Voltage	T_A = 25℃ T_A = 0℃ to 85℃	0.792 0.788	0.800 0.800	0.808 0.812	V
	Load Regulation			0.5		%
	Line Regulation			1		%
I_{FB}	FB Input Bias Current				200	nA
Enable						
V_{EN}	EN Input Threshold	Off threshold On threshold	 2.5		0.5	V
V_{EN_HYS}	EN Input Hysteresis			100		mV
PFM Control						
$V_{\overline{PFM}}$	$\overline{PFM}$ Input Threshold	PFM Mode threshold Force PWM threshold	 2.5		0.5	V
$V_{\overline{PFM}HYS}$	$\overline{PFM}$ Input Hysteresis			100		mV
Modulator						
T_{ON}	On Time	R_{TON} = 100kΩ, V_{IN} = 12V R_{TON} = 100kΩ, V_{IN} = 24V	200	250 150	300	ns
T_{ON_MIN}	Minimum On Time			100		ns
T_{OFF_MIN}	Minimum Off Time			250		ns

Symbol	Parameter	Conditions	Min.	Typ.	Max	Units
Soft-Start						
I_{SS_OUT}	SS Source Current	V_{SS} = 0, C_{SS} = 0.001µF to 0.1µF	7	10	15	µA
Power Good Signal						
V_{PG_LOW}	PGOOD Low Voltage	I_{OL} = 1mA			**0.5**	V
	PGOOD Leakage Current				**±1**	µA
V_{PGH} V_{PGL}	PGOOD Threshold	FB rising FB falling	12 -12	15 -10	18 -8	%
	PGOOD Threshold Hysteresis			3		%
T_{PG_L}	PGOOD Fault Delay Time (FB falling)			50		µs
Under Voltage and Over Voltage Protection						
V_{PL}	Under Voltage Threshold	FB falling	-30	-25	-20	%
T_{PL}	Under Voltage Delay Time			128		µs
V_{PH}	Over Voltage Threshold	FB rising	12	15	18	%
T_{UV_LX}	Under Voltage Shutdown Blanking Time	V_{IN} = 12V, V_{EN} = 0V, V_{CC} = 5V		20		mS
Power Stage Output						
$R_{DS(ON)}$	High-Side NFET On-Resistance	V_{IN} = 12V, V_{CC} = 5V		25	30	mΩ
	High-Side NFET Leakage	V_{EN} = 0V, V_{LX} = 0V			10	µA
$R_{DS(ON)}$	Low-Side NFET On-Resistance	V_{LX} = 12V, V_{CC} = 5V		10	12.5	mΩ
	Low-Side NFET Leakage	V_{EN} = 0V			10	µA
Over-current and Thermal Protection						
I_{LIM}	Valley Current Limit		8			A
	Thermal Shutdown Threshold	T_J rising T_J falling		145 100		℃

Functional Block Diagram

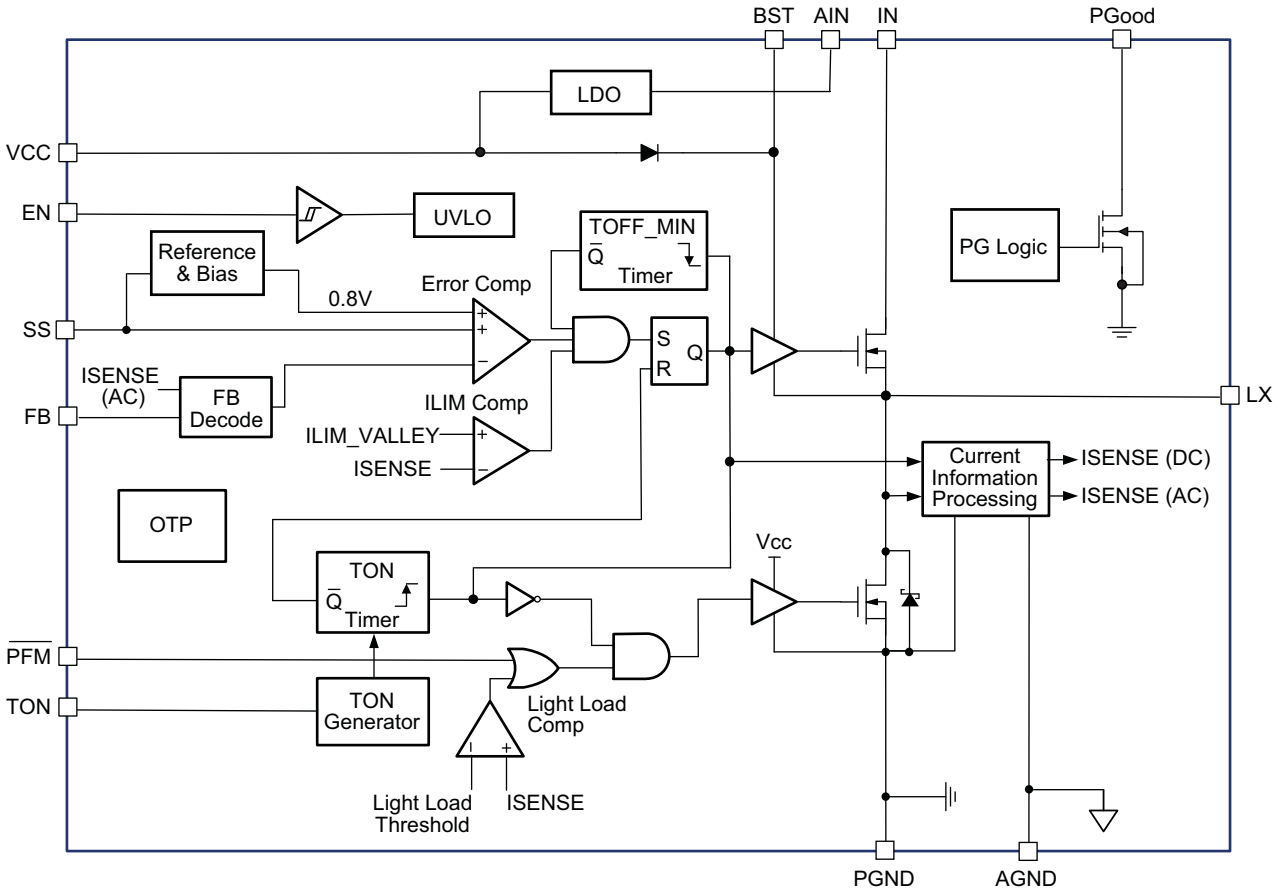

Typical Performance Characteristics

Circuit of Typical Application. T_A = 25℃, V_{IN} = 12V, V_{OUT} = 1.5V, fs = 300kHz unless otherwise specified.

Normal Operation

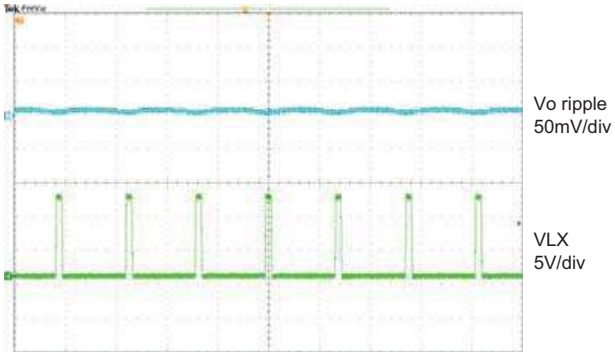

Load Transient 1.6A (20%) to 6.4A (80%)

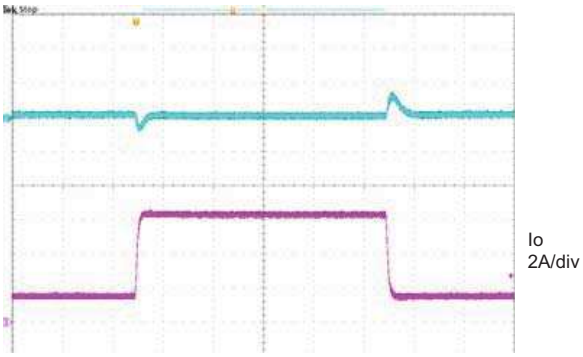

Full Load (8A) Start-up

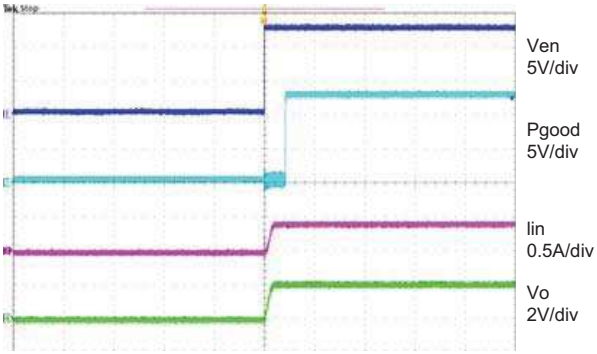

Full Load Short

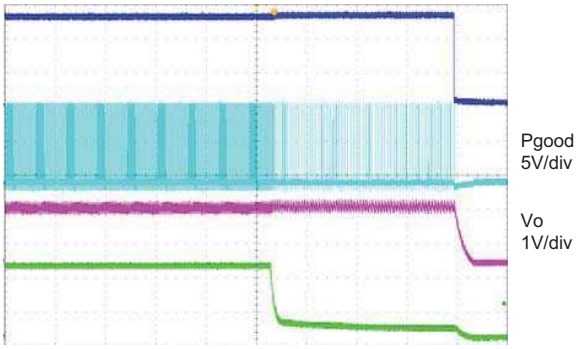

Detailed Description

The AOZ1233-01 is a high-efficiency, easy-to-use, synchronous buck regulator optimized for notebook computers. The regulator is capable of supplying 8A of continuous output current with an output voltage adjustable down to 0.8V. The programmable operating frequency range of 100kHz to 1MHz enables optimizing the configuration for PCB area and efficiency.

The input voltage of AOZ1233-01 can be as low as 2.7V. The highest input voltage of AOZ1233-01 can be 28V. Constant on-time PWM with input feed-forward control scheme results in ultra-fast transient response while maintaining relatively constant switching frequency over the entire input range. True AC current mode control scheme guarantees the regulator can be stable with a ceramic output capacitor. The switching frequency can be externally programmed up to 1MHz. Protection features include V_{CC} under-voltage lockout, valley current limit, output over voltage and under voltage protection, short-circuit protection, and thermal shutdown.

The AOZ1233-01 is available in 30-pin 5mm x 5mm QFN package.

Input Power Architecture

The AOZ1233-01 integrates an internal linear regulator to generate 5.3V V_{CC} from input. If input voltage is lower than 5.3V, the linear regulator operates at low drop-output mode; the V_{CC} voltage is equal to input voltage minus the drop-output voltage of internal linear regulator.

Enable and Soft Start

The AOZ1233-01 has external soft start feature to limit in-rush current and ensure the output voltage ramps up smoothly to regulation voltage. A soft start process begins when V_{CC} rises to 4.0V and voltage on EN pin is HIGH. An internal current source charges the external soft-start capacitor; the FB voltage follows the voltage of soft-start pin (V_{SS}) when it is lower than 0.8V. When V_{SS} is higher than 0.8V, the FB voltage is regulated by internal precise band-gap voltage (0.8V). The soft-start time can be calculated by the following formula:

$T_{SS}(\mu s) = 330 \times C_{SS}(nF)$

If C_{SS} is 1nF, the soft-start time will be 330µs; if C_{SS} is 10nF, the soft-start time will be 3.3ms.

Constant-On-Time PWM Control with Input Feed-Forward

The control algorithm of AOZ1233-01 is constant-on-time PWM Control with input feed-forward.

The simplified control schematic is shown in Figure 1.

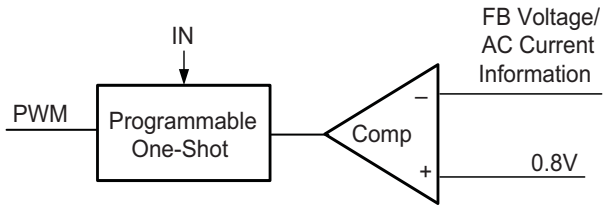

Figure 1. Simplified Control Schematic of AOZ1233-01

The high-side switch on-time is determined solely by a one-shot whose pulse width can be programmed by one external resistor and is inversely proportional to input voltage (IN). The one-shot is triggered when the internal 0.8V is lower than the combined information of FB voltage and the AC current information of inductor, which is processed and obtained through the sensed lower-side MOSFET current once it turns on. The added AC current information can help the stability of constant-on time control even with pure ceramic output capacitors, which have very low ESR. The AC current information has no DC offset, which does not cause offset with output load change, which is fundamentally different from other V^2 constant-on time control schemes.

The constant-on-time PWM control architecture is a pseudo-fixed frequency with input voltage feed-forward. The internal circuit of AOZ1233-01 sets the on-time of high-side switch inversely proportional to the IN.

$$T_{ON} = \frac{26.3 \times 10^{-12} \times R_{TON}(\Omega)}{V_{IN}(V)} \quad (1)$$

To achieve the flux balance of inductor, the buck converter has the equation:

$$F_{SW} = \frac{V_{OUT}}{V_{IN} \times T_{ON}} \quad (2)$$

Once the product of V_{IN} x T_{ON} is constant, the switching frequency keeps constant and is independent with input voltage.

An external resistor between the IN and TON pin sets the switching frequency according to the following equation:

$$F_{SW} = \frac{V_{OUT} \times 10^{12}}{26.3 \times R_{TON}} \quad (3)$$

A further simplified equation will be:

$$F_{SW}(kHz) = \frac{38000 \times V_{OUT}(V)}{R_{TON}(k\Omega)} \quad (4)$$

If V_{OUT} is 1.8V, R_{TON} is 137kΩ, the switching frequency will be 500kHz.

This algorithm results in a nearly constant switching frequency despite the lack of a fixed-frequency clock generator.

True Current Mode Control

The constant-on-time control scheme is intrinsically unstable if output capacitor's ESR is not large enough as an effective current-sense resistor. Ceramic capacitors usually cannot be used as output capacitor.

The AOZ1233-01 senses the low-side MOSFET current and processes it into DC and AC current information using AOS proprietary technique. The AC current information is decoded and added on the FB pin on phase. With AC current information, the stability of constant-on-time control is significantly improved even without the help of output capacitor's ESR, and thus the pure ceramic capacitor solution can be applicable. The pure ceramic capacitor solution can significantly reduce the output ripple (no ESR caused overshoot and undershoot) and less board area design.

Valley Current-Limit Protection

The AOZ1233-01 uses the valley current-limit protection by using R_{DSON} of the lower MOSFET current sensing. To detect real current information, a minimum constant-off (150ns typical) is implemented after a constant-on time. If the current exceeds the valley current-limit threshold, the PWM controller is not allowed to initiate a new cycle. The actual peak current is greater than the valley current-limit threshold by an amount equal to the inductor ripple current. Therefore, the exact current-limit characteristic and maximum load capability are a function of the inductor value as well as input and output voltages. The current limit will keep the low-side MOSFET ON and will not allow another high-side on-time, until the current in the low-side MOSFET reduces below the current limit. Figure 2 shows the inductor current during the current limit.

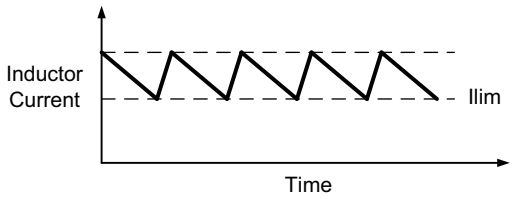

Figure 2. Inductor Current

After 128µs (typical), the AOZ1233-01 considers this is a true failed condition and therefore, turns-off both high-side and low-side MOSFETs and latches off. When triggered, only the enable can restart the AOZ1233-01 again.

Output Voltage Under-Voltage Protection

If the output voltage is lower than 25% by over-current or short circuit, the AOZ1233-01 will wait for 128µs (typical) and turns-off both high-side and low-side MOSFETs and latches off. When triggered, only the enable can restart the AOZ1233-01 again.

Output Voltage Over-Voltage Protection

The threshold of OVP is set 15% higher than 800mV. When the V_{FB} voltage exceeds the OVP threshold, high-side MOSFET is turned-off and low-side MOSFETs is turned-on until V_{FB} voltage is lower than 800mV.

Power Good Output

The power good (PGOOD) output, which is an open drain output, requires the pull-up resistor. When the output voltage is 10% below than the nominal regulation voltage for 50µs (typical), the PGOOD is pulled low. When the output voltage is 15% higher than the nominal regulation voltage, the PGOOD is also pulled low.

When combined with the under-voltage-protection circuit, this current limit method is effective in almost every circumstance. In forced-PWM mode, the AOZ1233-01 also implements a negative current limit to prevent excessive reverse inductor currents when VOUT is sinking current.

Application Information

The basic AOZ1233-01 application circuit is shown in pages 2 and 3. Component selection is explained below.

Input Capacitor

The input capacitor must be connected to the IN pins and PGND pin of the AOZ1233-01 to maintain steady input voltage and filter out the pulsing input current. A small decoupling capacitor, usually 1µF, should be connected to the VCC pin and AGND pin for stable operation of the AOZ1233-01. The voltage rating of input capacitor must be greater than maximum input voltage plus ripple voltage.

The input ripple voltage can be approximated by equation below:

$$\Delta V_{IN} = \frac{I_O}{f \times C_{IN}} \times \left(1 - \frac{V_O}{V_{IN}}\right) \times \frac{V_O}{V_{IN}}$$

Since the input current is discontinuous in a buck converter, the current stress on the input capacitor is another concern when selecting the capacitor. For a buck circuit, the RMS value of input capacitor current can be calculated by:

$$I_{CIN_RMS} = I_O \times \sqrt{\frac{V_O}{V_{IN}}\left(1 - \frac{V_O}{V_{IN}}\right)}$$

if let *m* equal the conversion ratio:

$$\frac{V_O}{V_{IN}} = m$$

The relation between the input capacitor RMS current and voltage conversion ratio is calculated and shown in Figure 3. It can be seen that when V_O is half of V_{IN}, C_{IN} it is under the worst current stress. The worst current stress on C_{IN} is 0.5 x I_O.

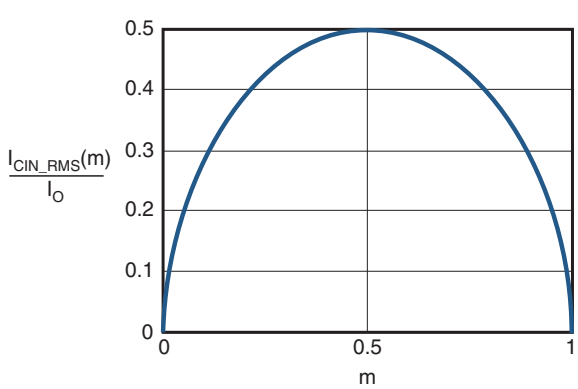

Figure 3. I_{CIN} vs. Voltage Conversion Ratio

For reliable operation and best performance, the input capacitors must have current rating higher than $I_{CIN\text{-}RMS}$ at worst operating conditions. Ceramic capacitors are preferred for input capacitors because of their low ESR and high ripple current rating. Depending on the application circuits, other low ESR tantalum capacitor or aluminum electrolytic capacitor may also be used. When selecting ceramic capacitors, X5R or X7R type dielectric ceramic capacitors are preferred for their better temperature and voltage characteristics. Note that the ripple current rating from capacitor manufactures is based on certain amount of life time. Further de-rating may be necessary for practical design requirement.

Inductor

The inductor is used to supply constant current to output when it is driven by a switching voltage. For given input and output voltage, inductance and switching frequency together decide the inductor ripple current, which is:

$$\Delta I_L = \frac{V_O}{f \times L} \times \left(1 - \frac{V_O}{V_{IN}}\right)$$

The peak inductor current is:

$$I_{Lpeak} = I_O + \frac{\Delta I_L}{2}$$

High inductance gives low inductor ripple current but requires a larger size inductor to avoid saturation. Low ripple current reduces inductor core losses. It also reduces RMS current through inductor and switches, which results in less conduction loss. Usually, peak to peak ripple current on inductor is designed to be 30% to 50% of output current.

When selecting the inductor, make sure it is able to handle the peak current without saturation even at the highest operating temperature.

The inductor takes the highest current in a buck circuit. The conduction loss on the inductor needs to be checked for thermal and efficiency requirements.

Surface mount inductors in different shapes and styles are available from Coilcraft, Elytone and Murata. Shielded inductors are small and radiate less EMI noise, but they do cost more than unshielded inductors. The choice depends on EMI requirement, price and size.

Output Capacitor

The output capacitor is selected based on the DC output voltage rating, output ripple voltage specification and ripple current rating.

The selected output capacitor must have a higher rated voltage specification than the maximum desired output voltage including ripple. De-rating needs to be considered for long term reliability.

Output ripple voltage specification is another important factor for selecting the output capacitor. In a buck converter circuit, output ripple voltage is determined by inductor value, switching frequency, output capacitor value and ESR. It can be calculated by the equation below:

$$\Delta V_O = \Delta I_L \times \left(ESR_{CO} + \frac{1}{8 \times f \times C_O} \right)$$

where,

C_O is output capacitor value and

ESR_{CO} is the Equivalent Series Resistor of output capacitor.

When a low ESR ceramic capacitor is used as output capacitor, the impedance of the capacitor at the switching frequency dominates. Output ripple is mainly caused by capacitor value and inductor ripple current. The output ripple voltage calculation can be simplified to:

$$\Delta V_O = \Delta I_L \times \frac{1}{8 \times f \times C_O}$$

If the impedance of ESR at switching frequency dominates, the output ripple voltage is mainly decided by capacitor ESR and inductor ripple current. The output ripple voltage calculation can be further simplified to:

$$\Delta V_O = \Delta I_L \times ESR_{CO}$$

For lower output ripple voltage across the entire operating temperature range, X5R or X7R dielectric type of ceramic, or other low ESR tantalum are recommended to be used as output capacitors.

In a buck converter, output capacitor current is continuous. The RMS current of output capacitor is decided by the peak to peak inductor ripple current. It can be calculated by:

$$I_{CO_RMS} = \frac{\Delta I_L}{\sqrt{12}}$$

Usually, the ripple current rating of the output capacitor is a smaller issue because of the low current stress. When the buck inductor is selected to be very small and inductor ripple current is high, the output capacitor could be overstressed.

Thermal Management and Layout Consideration

In the AOZ1233-01 buck regulator circuit, high pulsing current flows through two circuit loops. The first loop starts from the input capacitors, to the VIN pin, to the LX pins, to the filter inductor, to the output capacitor and load, and then returns to the input capacitor through ground. Current flows in the first loop when the high side switch is on. The second loop starts from the inductor, to the output capacitors and load, to the low side switch. Current flows in the second loop when the low side switch is on.

In PCB layout, minimizing the two loops area reduces the noise of this circuit and improves efficiency. A ground plane is strongly recommended to connect the input capacitor, output capacitor and PGND pin of the AOZ1233-01.

In the AOZ1233-01 buck regulator circuit, the major power dissipating components are the AOZ1233-01 and output inductor. The total power dissipation of the converter circuit can be measured by input power minus output power.

$$P_{total_loss} = V_{IN} \times I_{IN} - V_O \times I_O$$

The power dissipation of inductor can be approximately calculated by output current and DCR of inductor and output current.

$$P_{inductor_loss} = I_O^2 \times R_{inductor} \times 1.1$$

The actual junction temperature can be calculated with power dissipation in the AOZ1233-01 and thermal impedance from junction to ambient.

$$T_{junction} = (P_{total_loss} - P_{inductor_loss}) \times \Theta_{JA}$$

The maximum junction temperature of AOZ1233-01 is 150ºC, which limits the maximum load current capability.

The thermal performance of the AOZ1233-01 is strongly affected by the PCB layout. Extra care should be taken by users during design process to ensure that the IC will operate under the recommended environmental conditions.

Several layout tips are listed below for the best electric and thermal performance.

1. The LX pins and pad are connected to internal low side switch drain. They are low resistance thermal conduction path and most noisy switching node. Connect a large copper plane to LX pin to help thermal dissipation.
2. The IN pins and pad are connected to internal high side switch drain. They are also low resistance thermal conduction path. Connect a large copper plane to IN pins to help thermal dissipation.
3. Do not use thermal relief connection on the PGND pin. Pour a maximized copper area on the PGND pin to help thermal dissipation.
4. Input capacitors should be connected to the IN pin and the PGND pin as close as possible to reduce the switching spikes.
5. Decoupling capacitor C_{VCC} should be connected to VCC and AGND as close as possible.
6. Voltage divider R1 and R2 should be placed as close as possible to FB and AGND.
7. R_{TON} should be connected as close as possible to Pin 6 (TON pin).
8. A ground plane is preferred; Pin 26 (PGND) is connected to the ground plane through via.
9. Keep sensitive signal traces such as feedback trace far away from the LX pins.
10. Pour copper plane on all unused board area and connect it to stable DC nodes, like VIN, GND or VOUT.

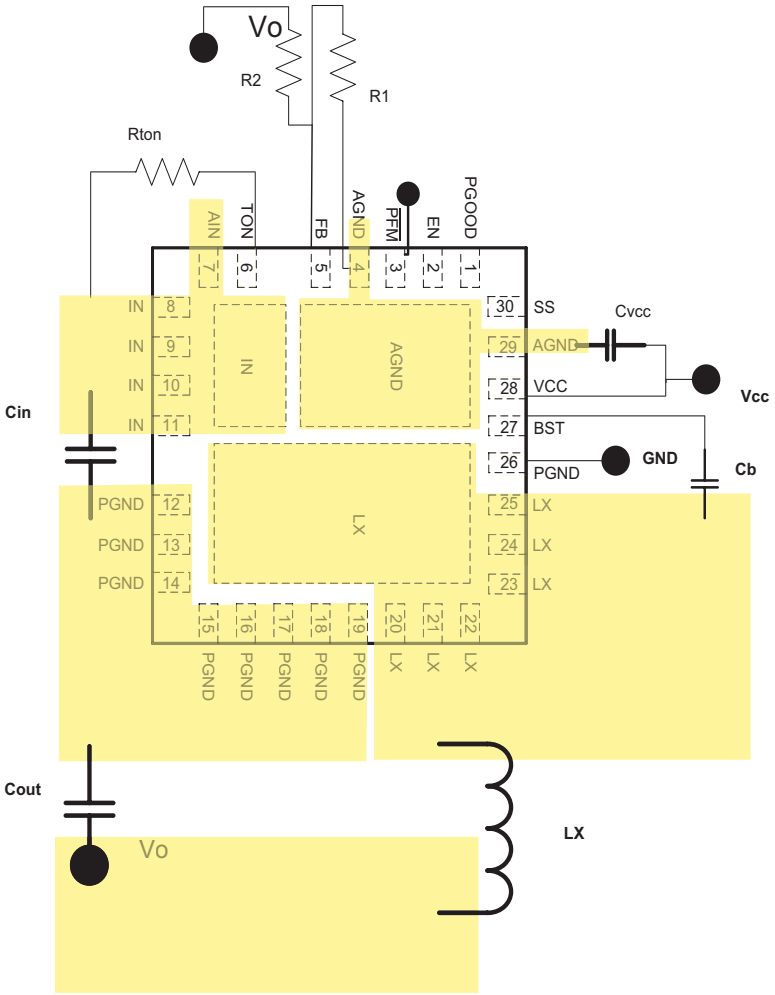

Package Dimensions, QFN 5x5, 30 Lead EP3_S

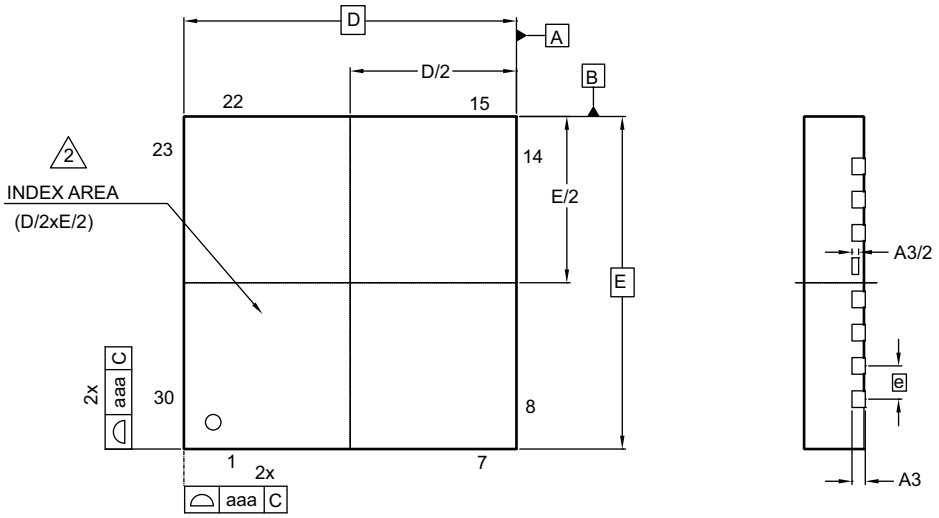

TOP VIEW

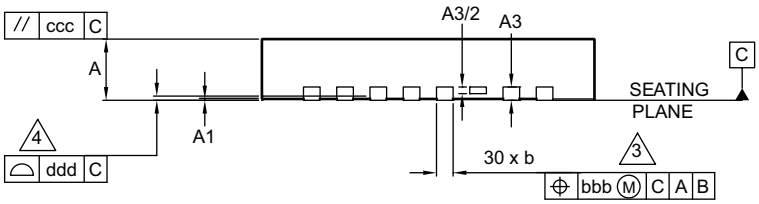

SIDE VIEW

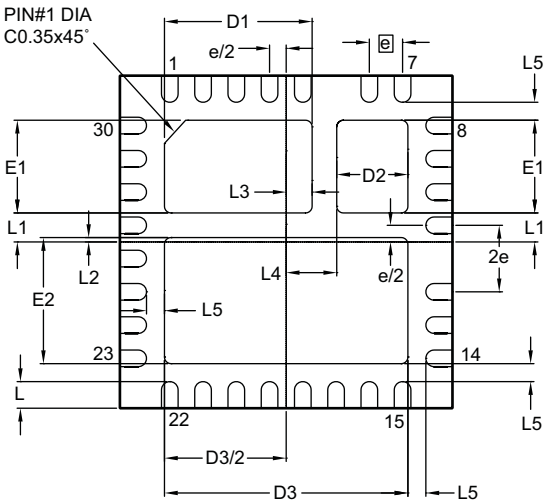

BOTTOM VIEW

Notes:

1. All dimensions are in millimeters.
2. The location of the terminal #1 identifier and terminal numbering convention conforms to JEDEC publication 95 SPP-002.
3. Dimension b applies to metallized terminal and is measured between 0.20 mm and 0.35 mm from the terminal tip. If the terminal has the optional radius on the other end of the terminal, then dimension b should not be measured in that radius area.
4. Coplanarity applies to the terminals and all other bottom surface metalization.

Package Dimensions, QFN 5x5, 30 Lead EP3_S (Continued)

RECOMMENDED LAND PATTERN

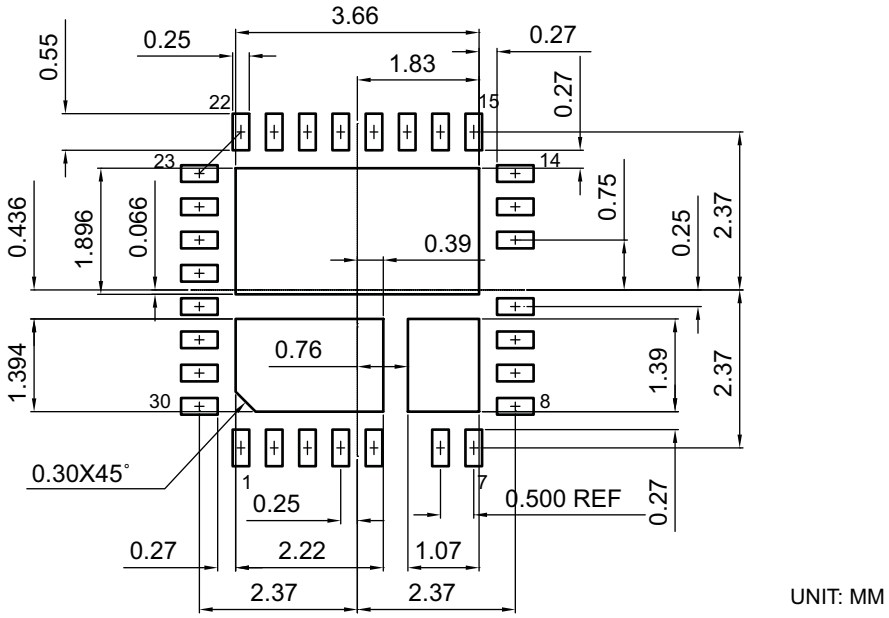

Dimensions in millimeters

Symbols	Min.	Typ.	Max.
A	0.80	0.90	1.00
A1	0.00	0.02	0.05
A3		0.20 REF	
b	0.20	0.25	0.35
D		5.00 BSC	
D1	2.12	2.22	2.32
D2	0.97	1.07	1.17
D3	3.56	3.66	3.76
E		5.00 BSC	
E1	1.294	1.394	1.494
E2	1.796	1.896	1.996
e		0.50 BSC	
L	0.30	0.40	0.50
L1	0.336	0.436	0.536
L2	—	0.066	0.166
L3	0.29	0.39	0.49
L4	0.66	0.76	0.86
L5	0.17	0.27	0.37
aaa		0.15	
bbb		0.10	
ccc		0.10	
ddd		0.08	

Dimensions in inches

Symbols	Min.	Typ.	Max.
A	0.031	0.035	0.039
A1	0.000	0.001	0.002
A3		0.008 REF	
b	0.008	0.010	0.014
D		0.197 BSC	
D1	0.083	0.087	0.091
D2	0.038	0.042	0.046
D3	0.140	0.144	0.148
E		0.197 BSC	
E1	0.051	0.055	0.059
E2	0.110	0.114	0.118
e		0.020 BSC	
L	0.012	0.016	0.020
L1	0.013	0.017	0.021
L2	—	0.003	0.007
L3	0.011	0.015	0.019
L4	0.026	0.030	0.034
L5	0.007	0.011	0.015
aaa		0.006	
bbb		0.004	
ccc		0.004	
ddd		0.003	

Tape and Reel Dimensions, QFN 5x5, 30 Lead EP3_S

Carrier Tape

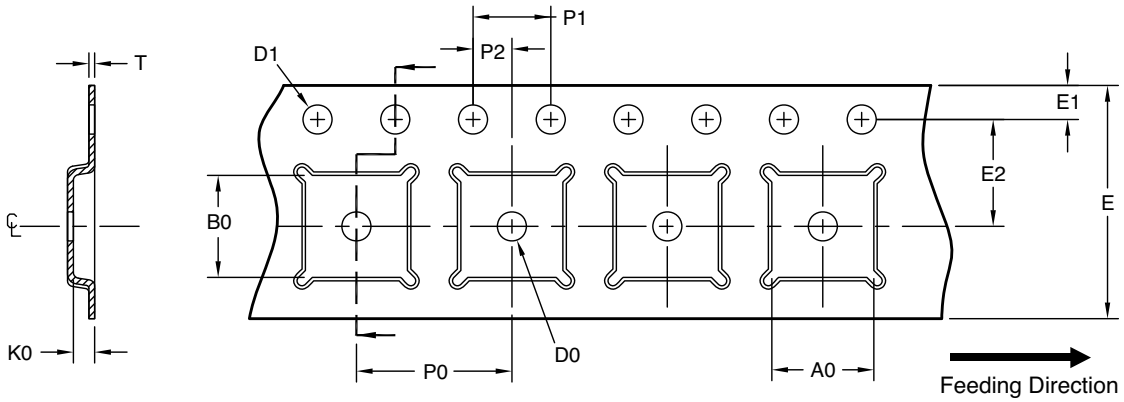

UNIT: mm

Package	A0	B0	K0	D0	D1	E	E1	E2	P0	P1	P2	T
QFN 5x5 (12mm)	5.25 ±0.10	5.25 ±0.10	1.10 ±0.10	1.50 Min.	1.50 +0.10/-0	12.00 +0.3	1.75 ±0.10	5.50 ±0.05	8.00 ±0.10	4.00 ±0.10	2.00 ±0.05	0.30 ±0.05

Reel

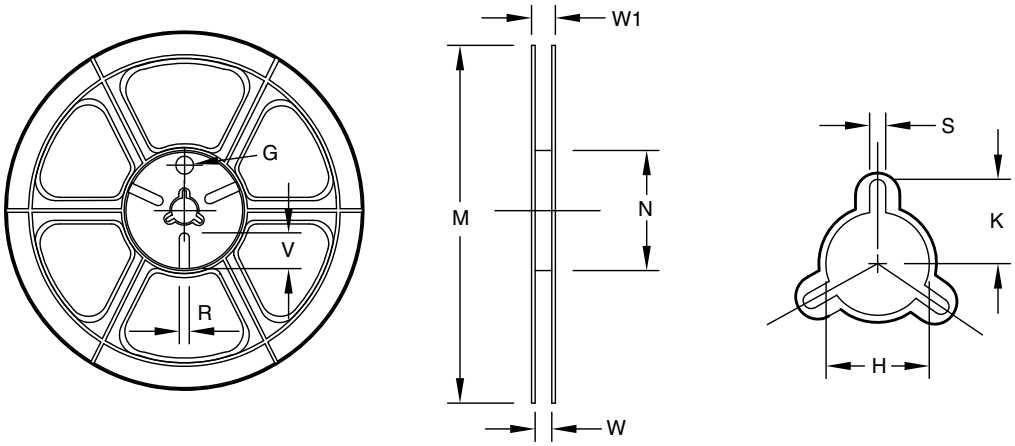

UNIT: mm

Tape Size	Reel Size	M	N	W	W1	H	K	S	G	R	V
12mm	ø330	ø330.0 ±2.0	ø79.0 ±1.0	12.4 +2.0/-0.0	17.0 +2.6/-1.2	ø13.0 ±0.5	10.5 ±0.2	2.0 ±0.5	—	—	—

Leader/Trailer and Orientation

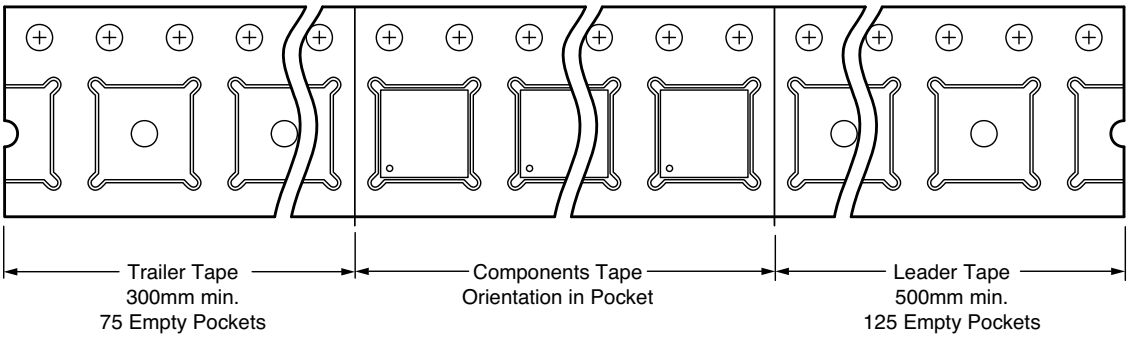

Part Marking

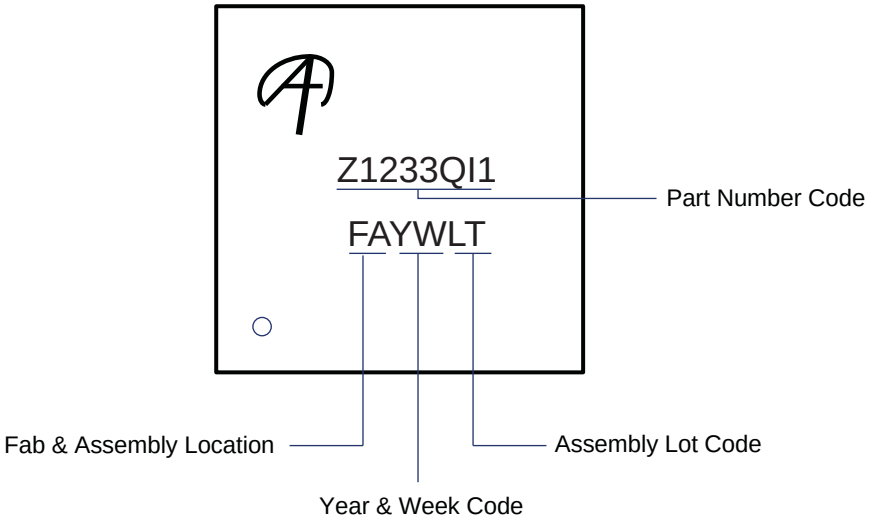

LEGAL DISCLAIMER

Alpha and Omega Semiconductor makes no representations or warranties with respect to the accuracy or completeness of the information provided herein and takes no liabilities for the consequences of use of such information or any product described herein. Alpha and Omega Semiconductor reserves the right to make changes to such information at any time without further notice. This document does not constitute the grant of any intellectual property rights or representation of non-infringement of any third party's intellectual property rights.

LIFE SUPPORT POLICY

ALPHA AND OMEGA SEMICONDUCTOR PRODUCTS ARE NOT AUTHORIZED FOR USE AS CRITICAL COMPONENTS IN LIFE SUPPORT DEVICES OR SYSTEMS.

As used herein:

1. Life support devices or systems are devices or systems which, (a) are intended for surgical implant into the body or (b) support or sustain life, and (c) whose failure to perform when properly used in accordance with instructions for use provided in the labeling, can be reasonably expected to result in a significant injury of the user.

2. A critical component in any component of a life support, device, or system whose failure to perform can be reasonably expected to cause the failure of the life support device or system, or to affect its safety or effectiveness.