AOZ8811

Ultra-Low Capacitance One-line TVS Diode

General Description

The AOZ8811 is a ultra-low capacitance one-line transient voltage suppressor diode designed to protect very high-speed data lines and voltage sensitive electronics from high transient conditions and ESD.

This device incorporates one TVS diode in an ultra-small DFN 1.0 x 0.6 package. During transient conditions, the ultra-low capacitance one-line TVS diode directs the transient to ground. It may be used to meet the ESD immunity requirements of IEC 61000-4-2, Level 4 (±15kV air, ±15kV contact discharge).

The AOZ8811 comes in an RoHS compliant DFN package and is rated over a -40°C to +85°C ambient temperature range.

The ultra-small DFN 1.0 x 0.6 x 0.5mm package makes it ideal for applications where PCB space is a premium. The small size and high ESD protection makes it ideal for protecting voltage sensitive electronics from high transient conditions and ESD.

Features

- ESD protection for high-speed data lines:
  - Exceeds: IEC 61000-4-2 (ESD) ±15V (air), ±15kV (contact)
  - Human Body Model (HBM) ±15kV
- Small package saves board space
- Ultra-low capacitance: 0.65pF
- Low clamping voltage
- Low operating voltage: 5V
- Green product

Applications

- Portable handheld devices
- Keypads, data lines, buttons
- Notebook computers
- Digital Cameras
- Portable GPS
- MP3 players

Typical Application

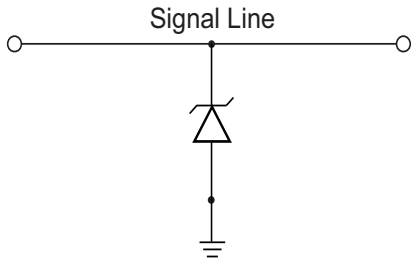

Unidirection Protection of Single Line

Pin Configuration

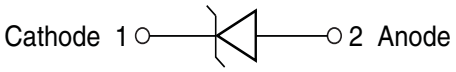

Ordering Information

Part Number	Ambient Temperature Range	Package	Environmental
AOZ8811DI-05	-40°C to +85°C	DFN 1.0 x 0.6	RoHS Compliant Green Product

AOS Green Products use reduced levels of Halogens, and are also RoHS compliant.
Please visit www.aosmd.com/web/quality/rohs_compliant.jsp for additional information.

Absolute Maximum Ratings

Exceeding the Absolute Maximum ratings may damage the device.

Parameter	Rating
VP – VN	5V
Peak Pulse Current (I_{PP}), t_P = 8/20µs	2A
Storage Temperature (T_S)	-65°C to +150°C
ESD Rating per IEC61000-4-2, Contact(1)	±15kV
ESD Rating per IEC61000-4-2, Air(1)	±15kV
ESD Rating per Human Body Model(2)	±15kV

Notes:
1. IEC 61000-4-2 discharge with $C_{Discharge}$ = 150pF, $R_{Discharge}$ = 330Ω.
2. Human Body Discharge per MIL-STD-883, Method 3015 $C_{Discharge}$ = 100pF, $R_{Discharge}$ = 1.5kΩ.

Maximum Operating Ratings

Parameter	Rating
Junction Temperature (T_J)	-40°C to +85°C

Electrical Characteristics

T_A = 25°C unless otherwise specified.

Symbol	Parameter	Diagram
I_{PP}	Maximum Reverse Peak Pulse Current	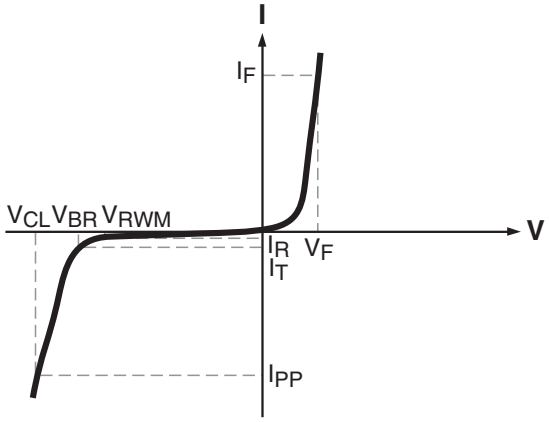
V_{CL}	Clamping Voltage @ I_{PP}	
V_{RWM}	Working Peak Reverse Voltage	
I_R	Maximum Reverse Leakage Current	
V_{BR}	Breakdown Voltage	
I_T	Test Current	
I_F	Forward Current	
V_F	Forward Voltage	
P_{PK}	Peak Power Dissipation	
C_J	Capacitance @ V_R = 0 and f = 1MHz	

Electrical Characteristics

T_A = 25°C unless otherwise noted, V_F = 0.9V Max. @ I_F = 10mA for all types

Device	Device Marking	V_{RWM} (V) Max.	V_{BR} (V) Max.	I_R (µA) Max.	V_F (V) Typ.	V_{CL} Max.			C_J (pF) Typ.	C_J (pF) Max.
						I_{PP} = 1A	I_{PP} = 2A	I_{PP} = 5A		
AOZ8811DI-05	CX	5.0	6.0	0.1	0.75	14.00	15.50	20.00	0.65	0.75

Typical Performance Characteristics

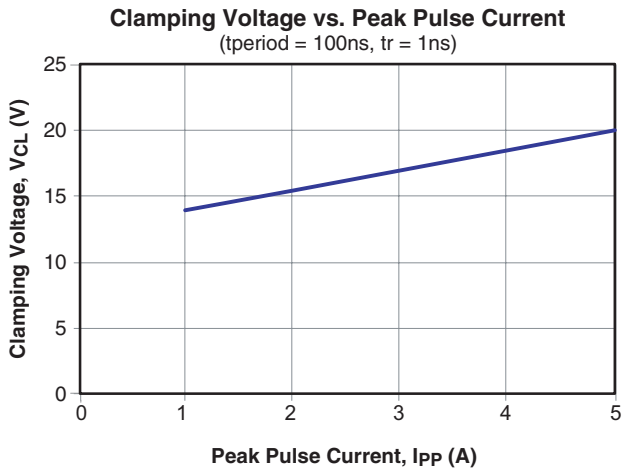

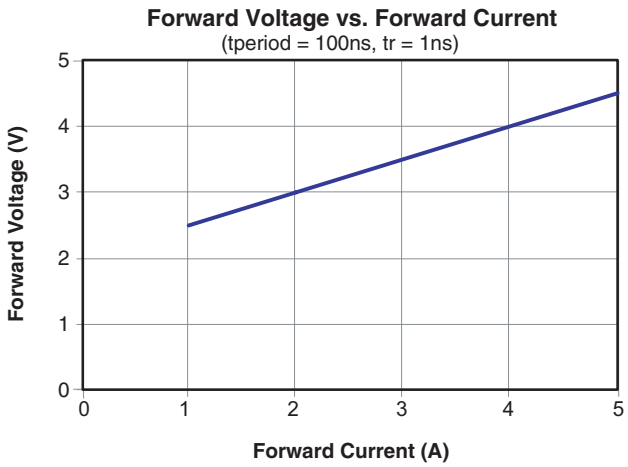

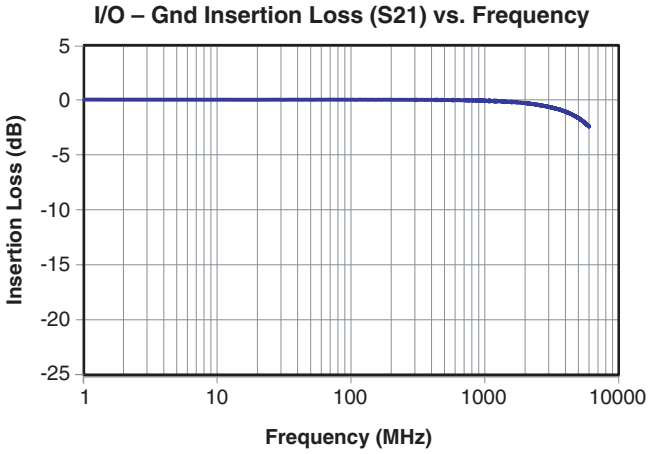

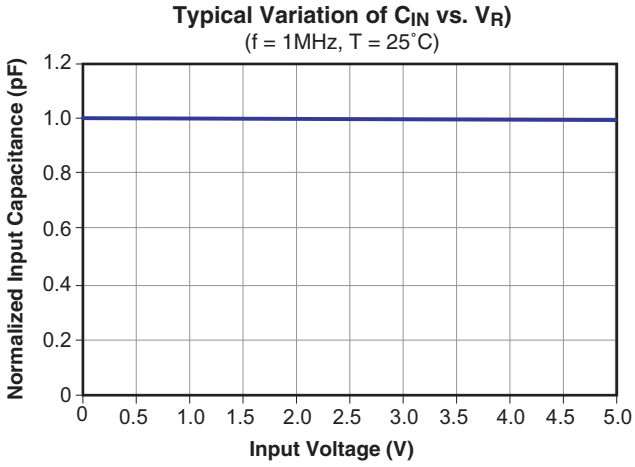

Package Dimensions, DFN 1.0 x 0.6

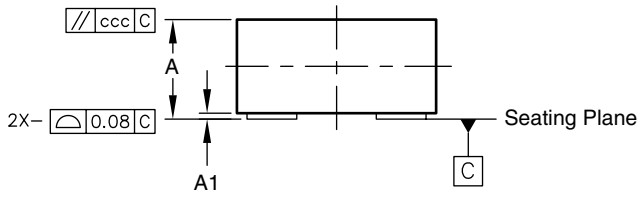

SIDE VIEW

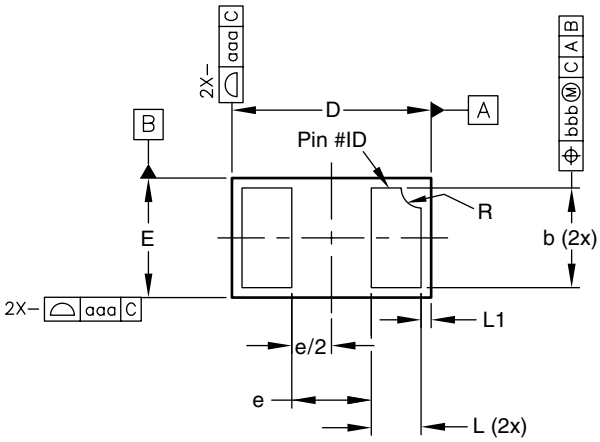

BOTTOM VIEW

RECOMMENDED LAND PATTERN

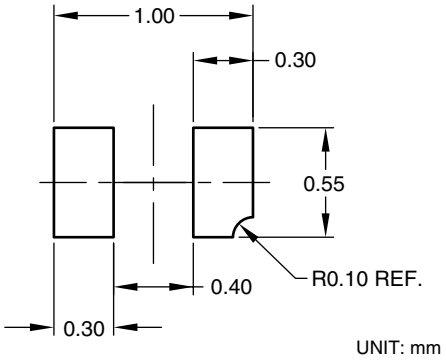

Dimensions in millimeters

Symbols	Min.	Nom.	Max.
A	0.47	0.52	0.55
A1	0.00	0.03	0.05
b	0.45	0.50	0.55
D	0.95	1.00	1.075
E	0.55	0.60	0.675
e	—	0.40	—
L	0.20	0.25	0.30
L1	0.050.03 REF.		
R	0.05	0.10	0.15
aaa	0.15		
bbb	0.05		
ccc	0.05		

Dimensions in inches

Symbols	Min.	Nom.	Max.
A	0.019	0.020	0.022
A1	0.000	0.001	0.002
b	0.018	0.020	0.022
D	0.037	0.039	0.042
E	0.022	0.024	0.027
e	—	0.016	—
L	0.008	0.010	0.012
L1	0.0020.001 REF.		
R	0.002	0.004	0.006
aaa	0.006		
bbb	0.002		
ccc	0.002		

Notes:

1. All dimensions are in millimeters, angles are in degrees.
2. Coplanarity applies to the exposed heat sink slug as well as the terminals.

Tape and Reel Dimensions, DFN 1.0 x 0.6

Carrier Tape

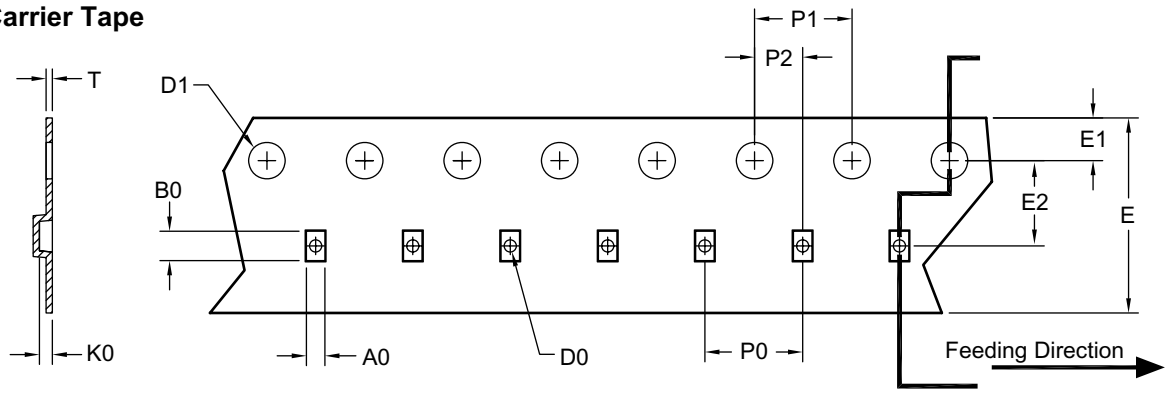

UNIT: mm

Package	A0	B0	K0	D0	D1	E	E1	E2	P0	P1	P2	T
SOD882	0.76 ±0.05	1.21 ±0.05	0.53 ±0.05	0.50 ±0.05	1.50 ±0.05	8.00 +0.30/-0.10	1.75 ±0.10	3.50 ±0.05	4.00 ±0.10	4.00 ±0.10	2.00 ±0.05	0.254 ±0.02

Reel

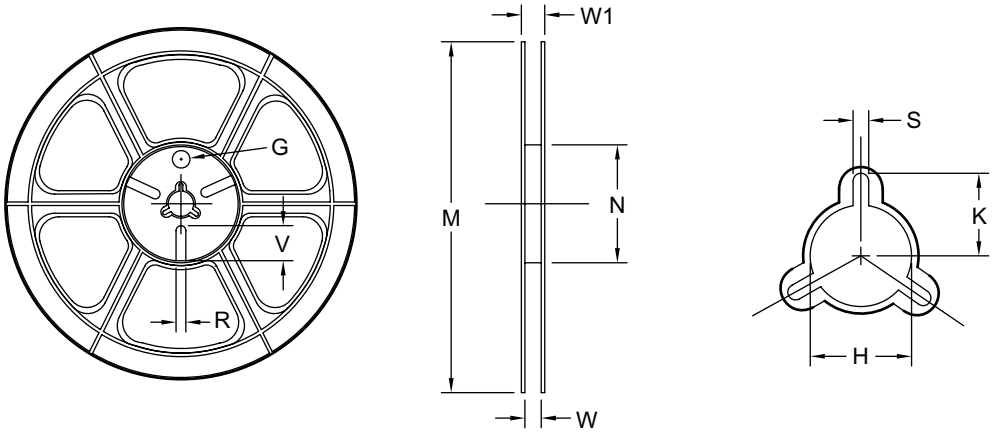

UNIT: mm

Tape Size	Reel Size	M	N	W	W1	H	K	S	G	R	V
8mm	ø178	ø178 ±0.50	ø55 ±1	8.4 +1.5/-0	14.4 Max.	ø13.0 ±0.5	10.1 Max.	2.0 ±0.5	N/A	N/A	N/A

Leader / Trailer & Orientation

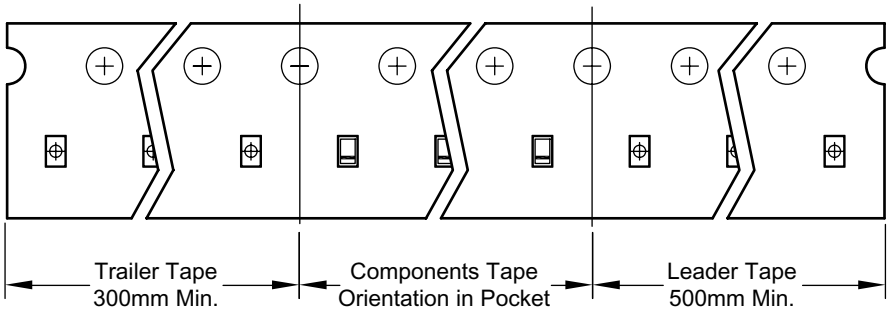

Part Marking

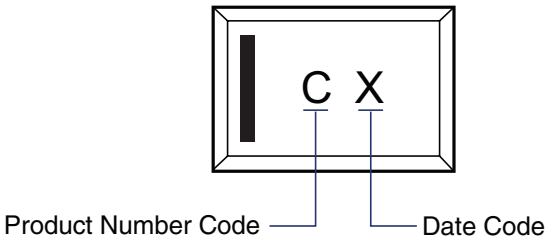

This data sheet contains preliminary data; supplementary data may be published at a later date.
Alpha & Omega Semiconductor reserves the right to make changes at any time without notice.

LIFE SUPPORT POLICY

ALPHA & OMEGA SEMICONDUCTOR PRODUCTS ARE NOT AUTHORIZED FOR USE AS CRITICAL COMPONENTS IN LIFE SUPPORT DEVICES OR SYSTEMS.

As used herein:

1. Life support devices or systems are devices or systems which, (a) are intended for surgical implant into the body or (b) support or sustain life, and (c) whose failure to perform when properly used in accordance with instructions for use provided in the labeling, can be reasonably expected to result in a significant injury of the user.

2. A critical component in any component of a life support, device, or system whose failure to perform can be reasonably expected to cause the failure of the life support device or system, or to affect its safety or effectiveness.