AOZ8231A

One-line Bi-directional TVS Diode

General Description

The AOZ8231A is a one-line bi-directional transient voltage suppressor diode designed to protect voltage sensitive electronics from high transient conditions and ESD.

This device incorporates one TVS diode in an ultra-small DFN 1006 package. It may be used to meet the ESD immunity requirements of EC 61000-4-2, Level 4 (±15kV air, ±8kV contact discharge).

The AOZ8231A comes in a RoHS compliant, Halogen-Free DFN 1.0 mm x 0.6 mm package and is rated over a -40 °C to +85 °C ambient temperature range.

The ultra-small 1.0 mm x 0.6 mm x 0.5 mm DFN package makes it ideal for applications where PCB space is a premium. The small size and high ESD protection makes it ideal for protecting voltage sensitive electronics from high transient conditions and ESD.

Applications

- Portable handheld devices
- Keypads, data lines, buttons
- Notebook computers
- Digital Cameras
- Portable GPS
- MP3 players

Features

- ESD protection for high-speed data lines

  AOZ8231ADI-02:
  - Exceeds: IEC 61000-4-2 (ESD) ± 30 kV (air), ± 30 kV (contact)
  - Human Body Model (HBM) ± 30 kV
  - IEC 61000-4-5 (Lightning) 6 A (8/20 µS)
  - IEC 61000-4-4 (EFT) 40 A

  AOZ8231ADI-03:
  - Exceeds: IEC 61000-4-2 (ESD) ± 30 kV (air), ± 30 kV (contact)
  - Human Body Model (HBM) ± 30 kV
  - IEC 61000-4-5 (Lightning) 6 A (8/20 µS)
  - IEC 61000-4-4 (EFT) 40 A

  AOZ8231ADI-05:
  - Exceeds: IEC 61000-4-2 (ESD) ± 30 kV (air), ±30 kV (contact)
  - Human Body Model (HBM) ± 30 kV
  - IEC 61000-4-5 (Lightning) 5 A (8/20 µS)
  - IEC 61000-4-4 (EFT) 40 A

  AOZ8231ADI-08:
  - Exceeds: IEC 61000-4-2 (ESD) ± 30 kV (air), ± 30 kV (contact)
  - Human Body Model (HBM) ± 30 kV
  - IEC 61000-4-5 (Lightning) 5 A (8/20 µS)
  - IEC 61000-4-4 (EFT) 40 A

  AOZ8231ADI-12:
  - Exceeds: IEC 61000-4-2 (ESD) ± 30 kV (air), ± 30 kV (contact)
  - Human Body Model (HBM) ± 30 kV
  - IEC 61000-4-5 (Lightning) 4 A (8/20 µS)
  - IEC 61000-4-4 (EFT) 40 A

  AOZ8231ADI-24:
  - Exceeds: IEC 61000-4-2 (ESD) ± 18 kV (air), ± 15 kV (contact)
  - Human Body Model (HBM) ± 15 kV
  - IEC 61000-4-5 (Lightning) 2.5 A (8/20 µS)
  - IEC 61000-4-4 (EFT) 40 A
- Small package saves board space
- Low insertion loss
- Low clamping voltage
- Low operating voltage
- Pb-free device

Typical Application

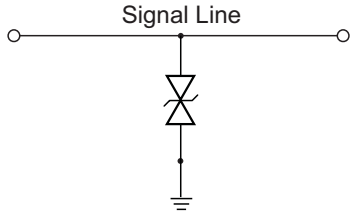

Bidirection Protection of Single Line

Pin Configuration

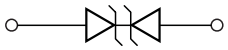

Ordering Information

Part Number	Ambient Temperature Range	Package	Environmental
AOZ8231ADI-02	-40 °C to +85 °C	DFN 1.0 x 0.6	Green Product
AOZ8231ADI-03			
AOZ8231ADI-05			
AOZ8231ADI-08			
AOZ8231ADI-12			
AOZ8231ADI-24			

AOS Green Products use reduced levels of Halogens, and are also RoHS compliant.
Please visit www.aosmd.com/media/AOSGreenPolicy.pdf for additional information.

Absolute Maximum Ratings

Exceeding the Absolute Maximum ratings may damage the device.

Parameter	Rating for AOZ8231ADI					
	-02	-03	-05	-08	-12	-24
VP – VN	2.5 V	3.3 V	5 V	8 V	12 V	24 V
Peak Pulse Current, t_P = 8/20 µs	6 A	6 A	5 A	5 A	4 A	2.5 A
Storage Temperature (T_S)	-65 °C to +150 °C					
ESD Rating per IEC61000-4-2, Contact(1)	± 30 kV	± 30 kV	± 30 kV	± 30 kV	± 30 kV	± 15 kV
ESD Rating per IEC61000-4-2, Air(1)	± 30 kV	± 30 kV	± 30 kV	± 30 kV	± 30 kV	±18 kV
ESD Rating per Human Body Model(2)	± 30 kV	± 30 kV	± 30 kV	± 30 kV	± 30 kV	± 15 kV

Notes:
1. IEC 61000-4-2 discharge with $C_{Discharge}$ = 150 pF, $R_{Discharge}$ = 330 Ω.
2. Human Body Discharge per MIL-STD-883, Method 3015 $C_{Discharge}$ = 100 pF, $R_{Discharge}$ = 1.5 kΩ.

Maximum Operating Ratings

Parameter	Rating
Junction Temperature (T_J)	-40 °C to +125 °C

Electrical Characteristics

T_A = 25 °C unless otherwise specified. V_F = 0.9 V Max. @ I_F = 10 mA for all types

Symbol	Parameter	Diagram
I_{PP}	Reverse Peak Pulse Current, (t_{period} = 100 ns, t_r = 1 ns)	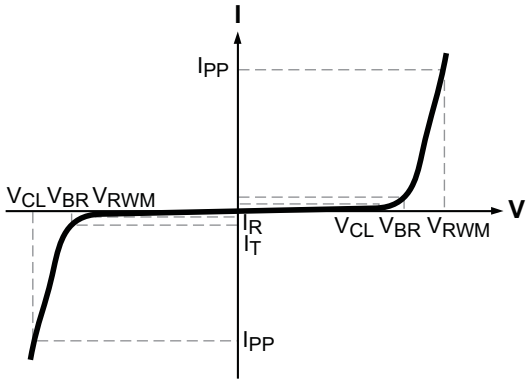
V_{CL}	Clamping Voltage @ I_{PP}	
V_{RWM}	Working Peak Reverse Voltage	
I_R	Maximum Reverse Leakage Current	
V_{BR}	Breakdown Voltage	
I_F	Forward Current	
V_F	Forward Voltage	
P_{PK}	Peak Power Dissipation	
C_J	Capacitance @ V_R = 0 and f = 1 MHz	

Device	Device Marking	V_{RWM} (V) Max.	V_{BR} (V) Min. @ 1mA	I_R (µA) Max.	V_{CL} Max.			C_J (pF)		
					I_{PP} = 1 A	I_{PP} = 5 A	I_{PP} = 12 A	Min.	Typ.	Max.
AOZ8231ADI-02	P	2.5	3.0	0.1	6.5	9.0	12.5	4.4	5.5	7.0
AOZ8231ADI-03	D	3.3	3.7	0.1	7.5	10.0	13.5	4.4	5.5	7.0
AOZ8231ADI-05	E	5.0	5.5	0.1	10.5	13.5	15.5	10.4	13.0	14.0
AOZ8231ADI-08	Y	8.0	9.5	0.1	15.0	18.0	22.5	19.0	23.0	27.0
AOZ8231ADI-12	F	12.0	13.0	0.1	20.0	23.0	26.0	10.4	13.0	14.0
AOZ8231ADI-24	R	24.0	29.0	0.1	35.0	38.0	39.0	9.6	12.0	15.0

Typical Performance Characteristics

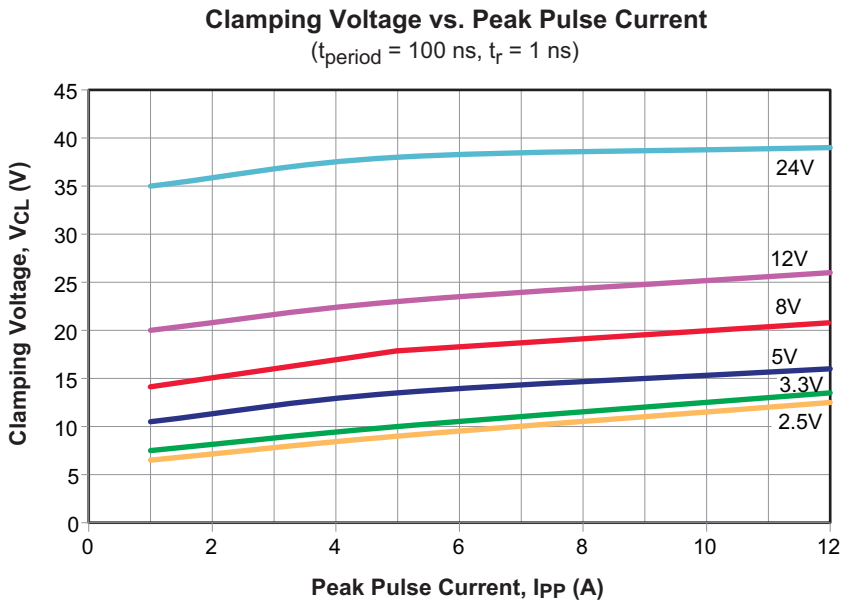

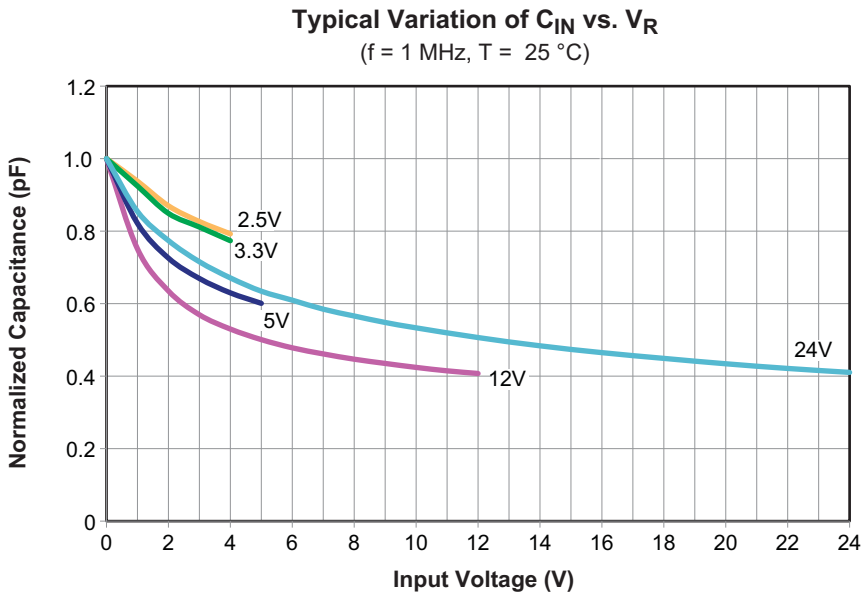

Package Dimensions, DFN 1.0 x 0.6

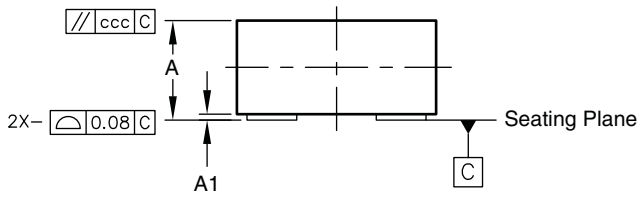

SIDE VIEW

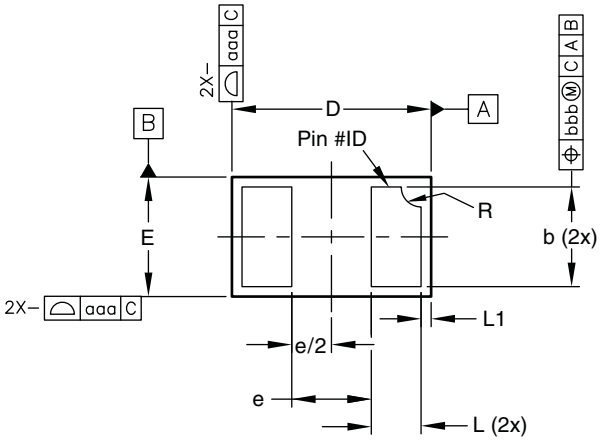

BOTTOM VIEW

RECOMMENDED LAND PATTERN

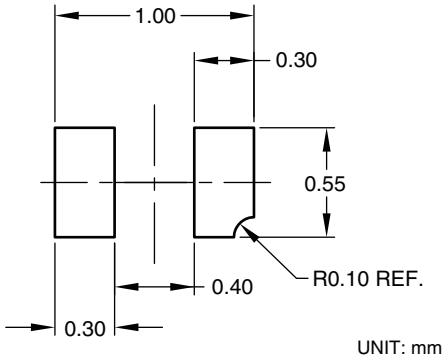

Dimensions in millimeters

Symbols	Min.	Nom.	Max.
A	0.47	0.52	0.55
A1	0.00	0.03	0.05
b	0.45	0.50	0.55
D	0.95	1.00	1.075
E	0.55	0.60	0.675
e	—	0.40	—
L	0.20	0.25	0.30
L1	0.05	0.03 REF.	
R	0.05	0.10	0.15
aaa	0.15		
bbb	0.05		
ccc	0.05		

Dimensions in inches

Symbols	Min.	Nom.	Max.
A	0.019	0.020	0.022
A1	0.000	0.001	0.002
b	0.018	0.020	0.022
D	0.037	0.039	0.042
E	0.022	0.024	0.027
e	—	0.016	—
L	0.008	0.010	0.012
L1	0.002	0.001 REF.	
R	0.002	0.004	0.006
aaa	0.006		
bbb	0.002		
ccc	0.002		

Notes:

1. All dimensions are in millimeters, angles are in degrees.
2. Coplanarity applies to the exposed heat sink slug as well as the terminals.

Tape and Reel Dimensions, DFN 1.0 x 0.6

Carrier Tape

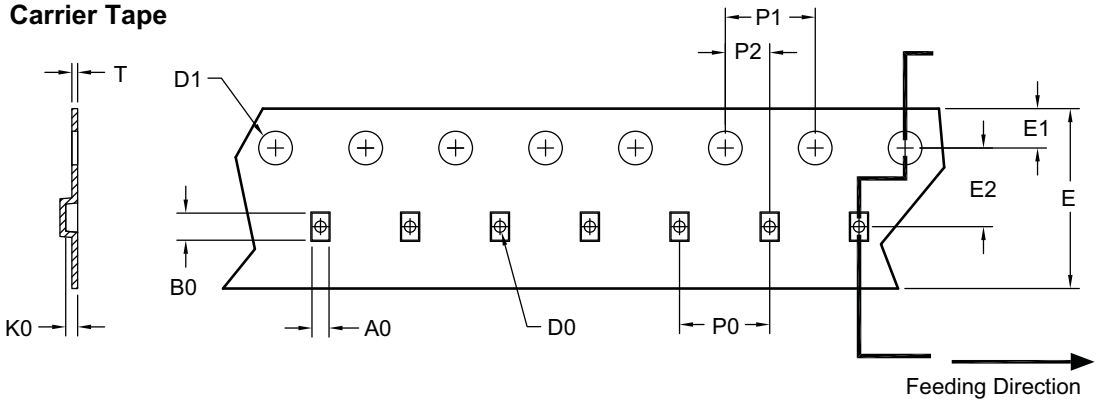

UNIT: mm

Package	A0	B0	K0	D0	D1	E	E1	E2	P0	P1	P2	T
DFN 1.0x0.6 (8 mm)	0.76 ±0.05	1.21 ±0.05	0.53 ±0.05	ø0.50 ±0.05	ø1.50 ±0.10	8.00 +0.30/-0.10	1.75 ±0.1	3.50 ±0.05	4.00 ±0.10	4.0 ±0.10	2.0 ±0.05	0.254 ±0.02

Reel

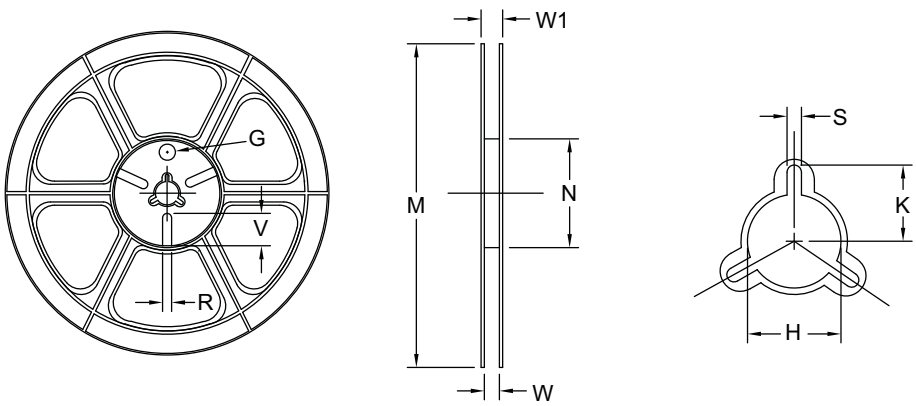

UNIT: mm

Tape Size	Reel Size	M	N	W	W1	H	K	S	G	R	V
8mm	ø178	ø178 ±0.5	ø55 ±1	8.4 +1.5/-0	14.4. Max.	ø13.0 ±0.5	2.0 ±0.5	2.0 ±0.5	N/A	N/A	N/A

Leader / Trailer & Orientation

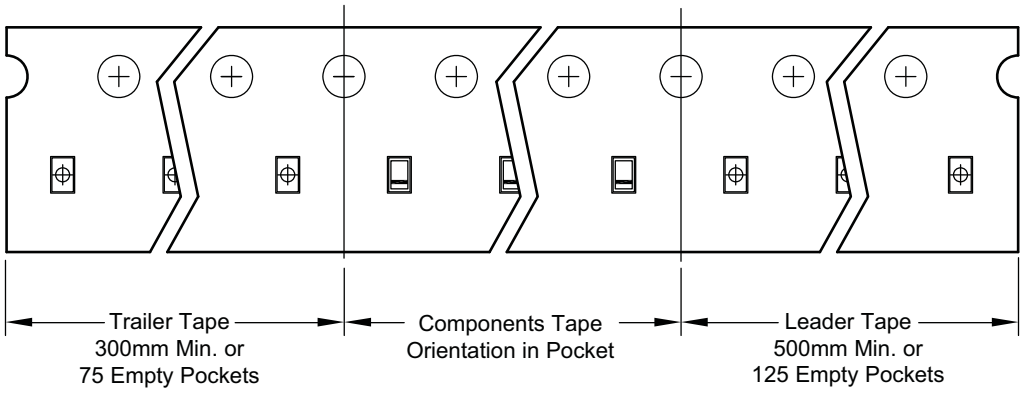

Part Marking

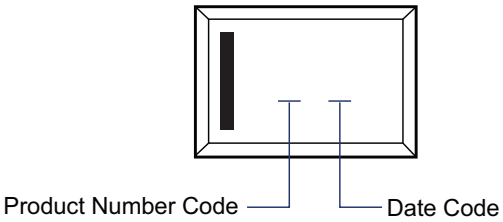

LEGAL DISCLAIMER

Alpha and Omega Semiconductor makes no representations or warranties with respect to the accuracy or completeness of the information provided herein and takes no liabilities for the consequences of use of such information or any product described herein. Alpha and Omega Semiconductor reserves the right to make changes to such information at any time without further notice. This document does not constitute the grant of any intellectual property rights or representation of non-infringement of any third party's intellectual property rights.

LIFE SUPPORT POLICY

ALPHA AND OMEGA SEMICONDUCTOR PRODUCTS ARE NOT AUTHORIZED FOR USE AS CRITICAL COMPONENTS IN LIFE SUPPORT DEVICES OR SYSTEMS.

As used herein:

1. Life support devices or systems are devices or systems which, (a) are intended for surgical implant into the body or (b) support or sustain life, and (c) whose failure to perform when properly used in accordance with instructions for use provided in the labeling, can be reasonably expected to result in a significant injury of the user.

2. A critical component in any component of a life support, device, or system whose failure to perform can be reasonably expected to cause the failure of the life support device or system, or to affect its safety or effectiveness.