AOZ8208

Eight-line TVS Diode Array

General Description

The AOZ8208 is a transient voltage suppressor diode array designed to protect data lines from high transient conditions and ESD. This state-of-the-art device utilizes AOS leading edge Trench Vertical Structure [TVS]^2 ™ technology for superior clamping performance.

This device incorporates eight TVS diodes in a single package. During transient conditions, the TVS diodes direct the transient to ground. They may be used to meet the ESD immunity requirements of IEC 61000-4-2, Level 4 (±15kV air, ±8kV contact discharge).

The AOZ8208 is RoHS compliant. The DFN-8 package is rated over a -40°C to +85°C ambient temperature range.

The very small DFN-8 1.8 x 1.2 x 0.55mm package makes it ideal for applications where PCB space is a premium. The small size and high ESD protection makes it ideal for protecting high speed video and data communication interfaces.

Features

- ESD protection for high-speed data lines:
  - Exceeds: IEC 61000-4-2 (ESD) ±15kV (air), ±15kV (contact)
  - IEC61000-4-5 (Lightning) 5A (8/20µS)
  - Human Body Model (HBM) ±20kV
- Trench Vertical Structure [TVS]^2 ™ based technology used to achieve excellent ESD clamping performance
- Small package saves board space
- Low insertion loss
- Protects eight unidirectional I/O lines
- Low clamping voltage
- Low operating voltage: 5.0V
- Green product, Pb-free

Applications

- Portable handheld devices
- Keypads, data lines
- Notebook computers
- Digital Cameras
- Portable GPS
- MP3 players

Typical Applications

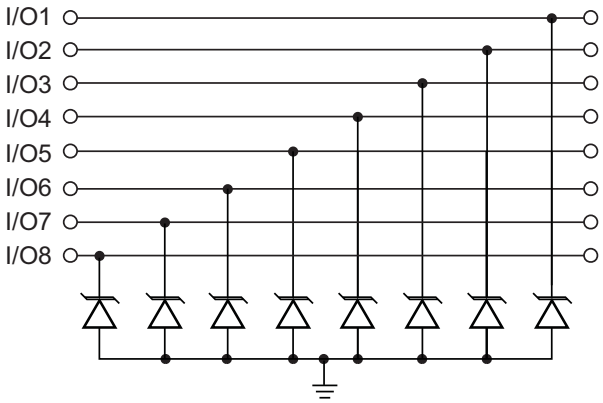

Unidirection Protection of Eight Lines

Pin Configuration

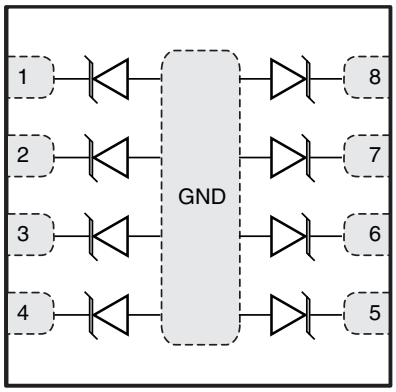

Top View

Ordering Information

Part Number	Ambient Temperature Range	Package	Environmental
AOZ8208DI-05	-40°C to +85°C	DFN-8	Green Product RoHS Compliant

AOS Green Products use reduced levels of Halogens, and are also RoHS compliant.
Please visit www.aosmd.com/web/quality/rohs_compliant.jsp for additional information.

Absolute Maximum Ratings

Exceeding the Absolute Maximum ratings may damage the device.

Parameter	Rating
Peak Pulse Current (I_{PP}), t_P = 8/20µs	5A
Storage Temperature (T_S)	-65°C to +150°C
ESD Rating per IEC61000-4-2, Contact(1)	±15kV
ESD Rating per IEC61000-4-2, Air(1)	±15kV
ESD Rating per Human Body Model(2)	±20kV

Notes:
1. IEC 61000-4-2 discharge with $C_{Discharge}$ = 150pF, $R_{Discharge}$ = 330Ω.
2. Human Body Discharge per MIL-STD-883, Method 3015 $C_{Discharge}$ = 100pF, $R_{Discharge}$ = 1.5kΩ.

Maximum Operating Ratings

Parameter	Rating
Junction Temperature (T_J)	-40°C to +125°C

Electrical Characteristics

T_A = 25°C unless otherwise specified.

Symbol	Parameter	Diagram
I_{PP}	Maximum Reverse Peak Pulse Current	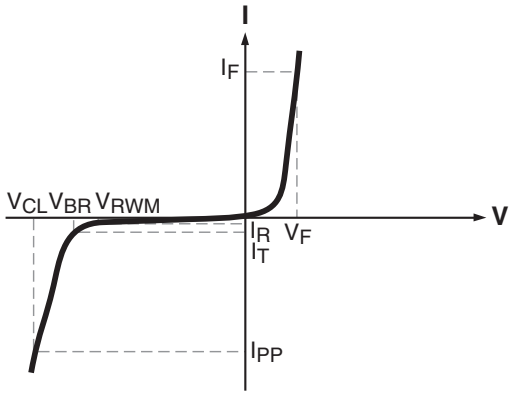
V_{CL}	Clamping Voltage @ I_{PP}	
V_{RWM}	Working Peak Reverse Voltage	
I_R	Maximum Reverse Leakage Current	
V_{BR}	Breakdown Voltage	
I_F	Forward Current	
V_F	Forward Voltage	
P_{PK}	Peak Power Dissipation	
C_J	Capacitance @ V_R = 0 and f = 1MHz	

Device	Device Marking	V_{RWM} (V) Max.	V_{BR} (V) Min.	I_R (µA) Max.	V_F (V) Typ.	V_{CL} Max.			C_J (pF) Typ.	C_J (pF) Max.
						I_{PP} = 1A	I_{PP} = 5A	I_{PP} = 12A		
AOZ8208DI-05	D	5	6.0	0.1	0.85	7.0	8.0	9.0	10	12

Typical Performance Characteristics

Typical Variation of C_{IN} vs. V_R
(f = 1MHz, T = 25°C)

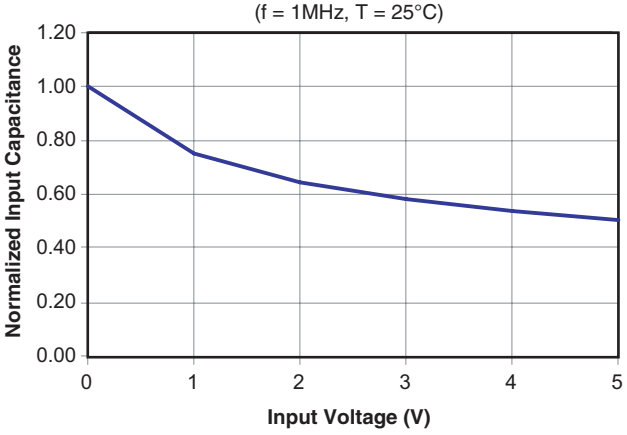

Clamping Voltage vs. Peak Pulse Current
(t_{period} = 100ns, t_r = 1ns)

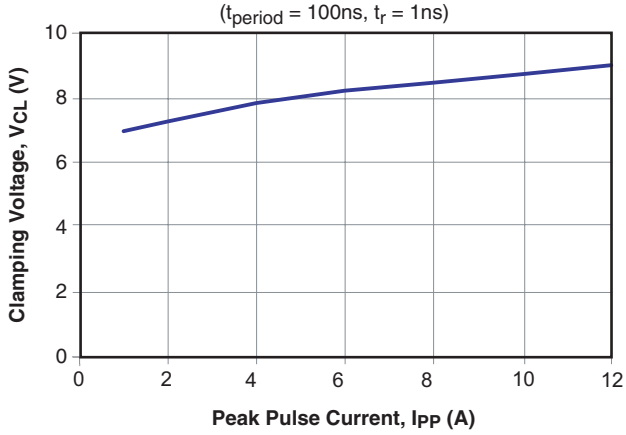

Forward Voltage vs. Forward Current
(t_{period} = 100ns, t_r = 1ns)

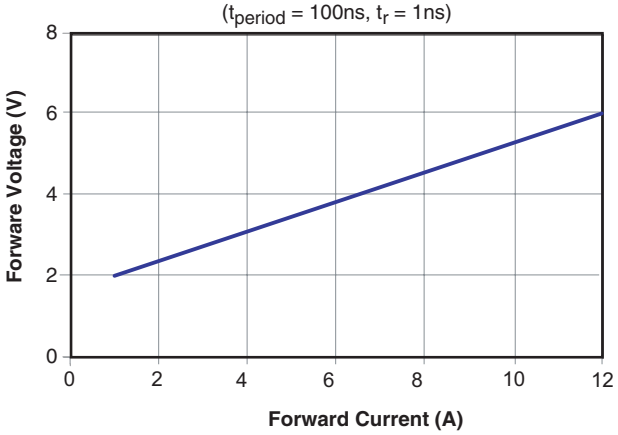

I/O – Gnd Insertion Loss (S21) vs. Frequency

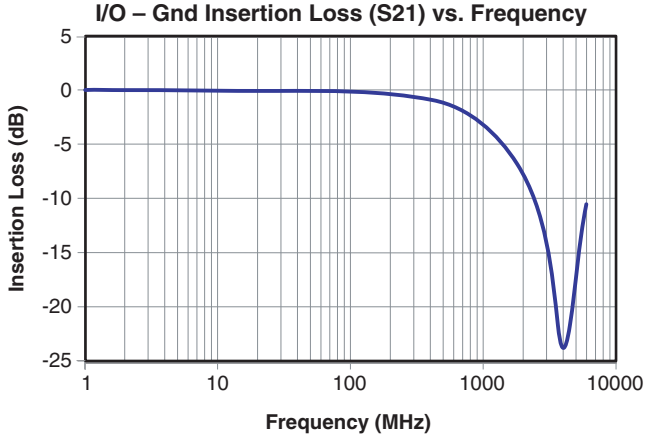

Crosstalk (I/O–I/O) vs. Frequency

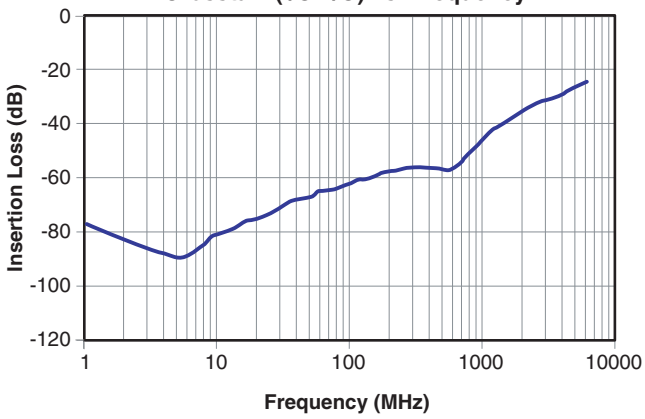

Applications Information

Device Connection for Protection of Eight Unidirectional Data Lines

These devices are designed to protect up to eight unidirectional data lines. The device is connected as follows.

- Unidirectional protection of eight I/O lines is achieved by connecting pins 1 through 8 to the data lines. The ground connection should be made directly to the ground plane for best results. The path length is kept as short as possible to reduce the effects of parasitic inductance in the board traces.

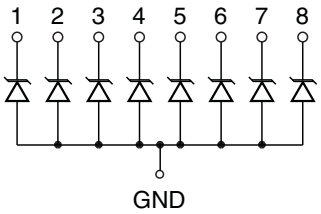

Circuit Diagram

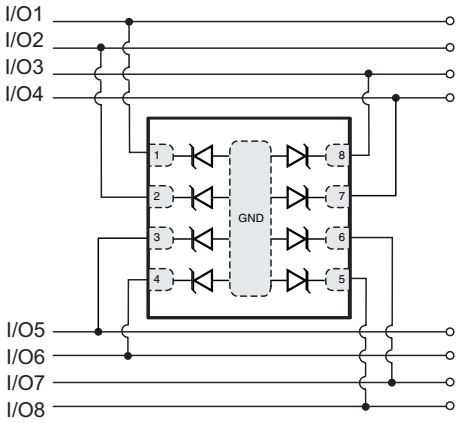

Protection of Eight Unidirection Lines

Circuit Board Layout Recommendations for Suppression of ESD

Good circuit board layout is critical for the suppression of ESD induced transients. The following guidelines are recommended:

- Place the TVS near the input terminals or connectors to restrict transient coupling.
- Minimize the path length between the TVS and the protected line.
- Minimize all conductive loops including power and ground loops.
- The ESD transient return path to ground should be kept as short as possible.
- Never run critical signals near board edges.
- Use ground planes whenever possible.

Package Dimensions, DFN 1.8 x 1.2, 8L

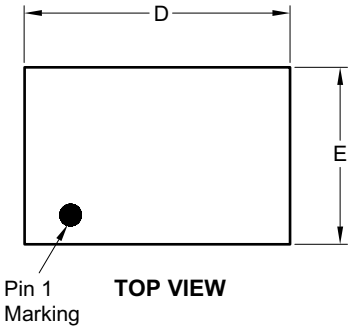

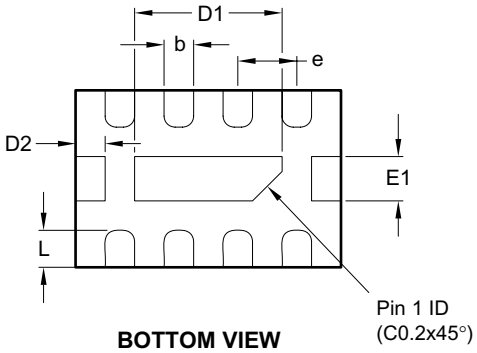

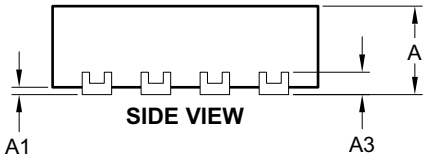

RECOMMENDED LAND PATTERN

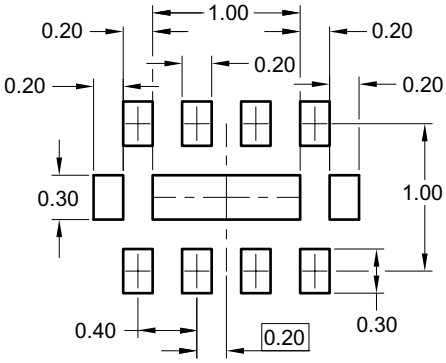

Dimensions in millimeters

Symbols	Min.	Nom.	Max.
A	0.50	0.55	0.60
A1	0.00	—	0.05
A3	0.152 Ref.		
b	0.15	0.20	0.25
D	1.75	1.80	1.85
D1	0.95	1.00	1.05
D2	0.200 Ref.		
E	1.15	1.20	1.25
E1	0.25	0.30	0.35
e	0.40 BSC		
L	0.20	0.25	0.30

Dimensions in inches

Symbols	Min.	Nom.	Max.
A	0.020	0.022	0.024
A1	0.000	—	0.002
A3	0.006 Ref.		
b	0.006	0.008	0.010
D	0.069	0.071	0.073
D1	0.037	0.039	0.041
D2	0.008 Ref.		
E	0.045	0.047	0.049
E1	0.010	0.012	0.014
e	0.016 BSC		
L	0.008	0.010	0.012

Notes:

1. Controlling dimension is millimeter, converted inch dimensions are not necessaily exact.
2. Warpage shall not exceed 0.10mm.
3. Marking is for package orientation reference only.

Tape and Reel Dimensions, DFN 1.8 x 1.2, 8L

Carrier Tape

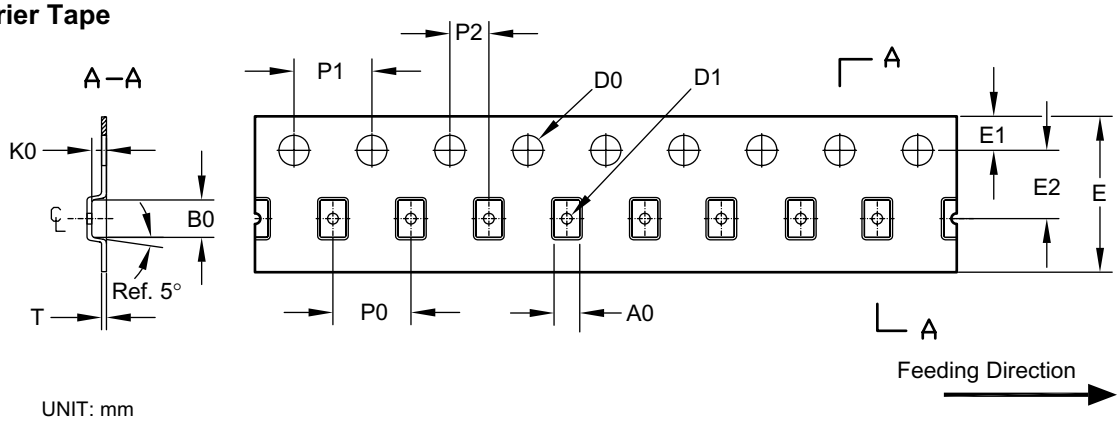

UNIT: mm

Package	A0	B0	K0	D0	D1	E	E1	E2	P0	P1	P2	T
DFN 1.8x1.2	1.32 ±0.05	1.92 ±0.05	0.75 ±0.05	ø1.55 ±0.05	ø0.55 ±0.05	8.00 +0.3/-0.1	1.75 ±0.1	3.50 ±0.05	4.00 ±0.1	4.0 ±0.1	2.0 ±0.05	0.25 ±0.05

Reel

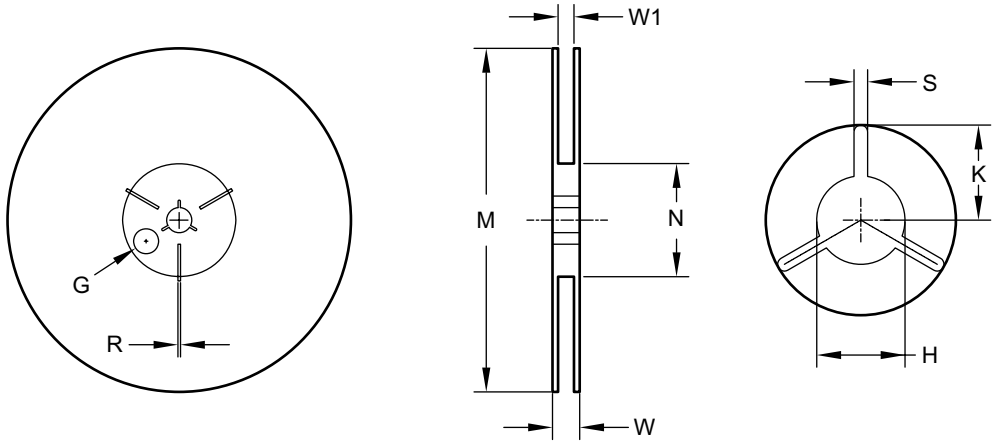

UNIT: mm

Tape Size	Reel Size	M	N	W	W1	H	S	K	G	R
8mm	ø178	ø178.0 ±1.0	ø60.0 ±1.0	11.80 ±0.5	9.0 ±0.5	ø13.0 +0.5/-0.2	2.40 ±0.10	10.25 ±0.2	ø9.8	—

Leader / Trailer & Orientation

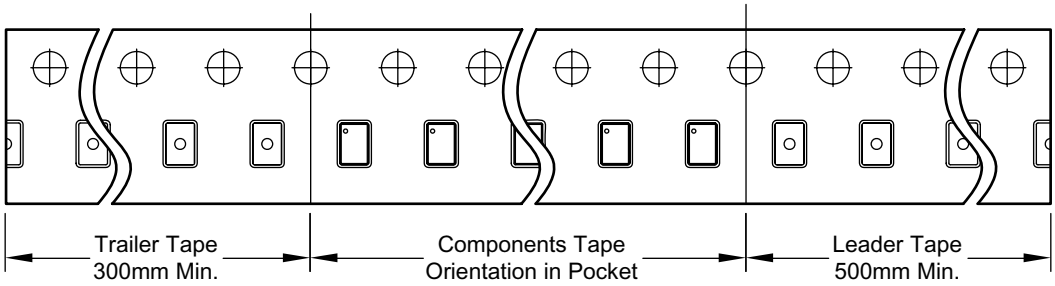

Package Marking

AOZ8208DI-05
(DFN 1.8 x 1.2, 8L)

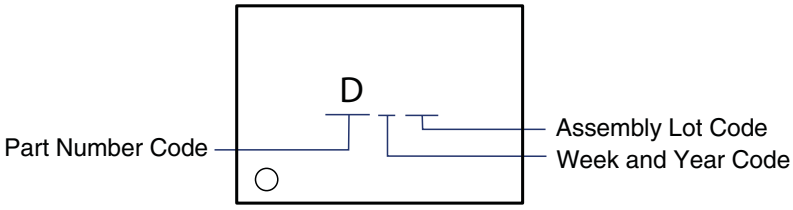

Revision History

Revision	Revised Item
Rev. 1.0	Initial release

This data sheet contains preliminary data; supplementary data may be published at a later date.
Alpha & Omega Semiconductor reserves the right to make changes at any time without notice.

LIFE SUPPORT POLICY

ALPHA & OMEGA SEMICONDUCTOR PRODUCTS ARE NOT AUTHORIZED FOR USE AS CRITICAL COMPONENTS IN LIFE SUPPORT DEVICES OR SYSTEMS.

As used herein:

1. Life support devices or systems are devices or systems which, (a) are intended for surgical implant into the body or (b) support or sustain life, and (c) whose failure to perform when properly used in accordance with instructions for use provided in the labeling, can be reasonably expected to result in a significant injury of the user.

2. A critical component in any component of a life support, device, or system whose failure to perform can be reasonably expected to cause the failure of the life support device or system, or to affect its safety or effectiveness.