ALPHA & OMEGA SEMICONDUCTOR

AOD4185/AOI4185
P-Channel Enhancement Mode Field Effect Transistor

General Description

The AOD4185/AOI4185 uses advanced trench technology to provide excellent $R_{DS(ON)}$ and low gate charge. With the excellent thermal resistance of the DPAK/IPAK package, this device is well suited for high current applications.

-RoHS Compliant
-Halogen Free*

Features

V_{DS} (V) = -40V
I_D = -40A (V_{GS} = -10V)
$R_{DS(ON)}$ < 15mΩ (V_{GS} = -10V)
$R_{DS(ON)}$ < 20mΩ (V_{GS} = -4.5V)

100% UIS Tested!
100% Rg Tested!

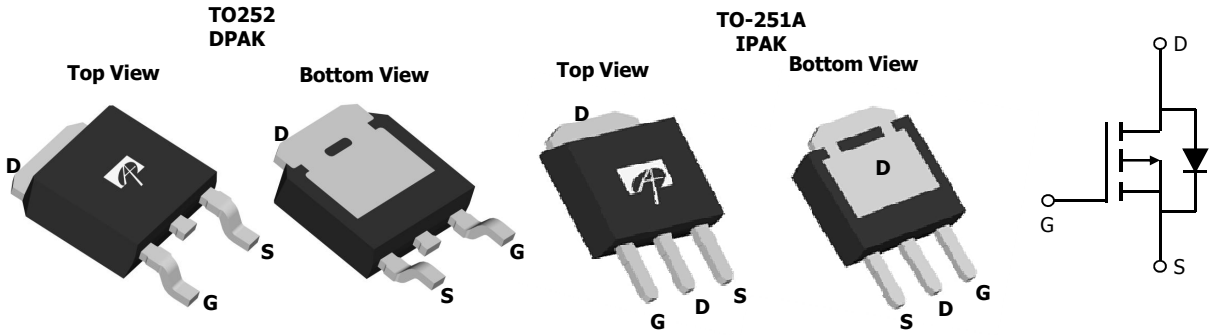

Absolute Maximum Ratings T_C=25℃ unless otherwise noted

Parameter		Symbol	Maximum	Units
Drain-Source Voltage		V_{DS}	-40	V
Gate-Source Voltage		V_{GS}	±20	V
Continuous Drain Current [B,H]	T_C=25℃	I_D	-40	A
	T_C=100℃		-31	
Pulsed Drain Current [C]		I_{DM}	-115	
Avalanche Current [C]		I_{AR}	-42	
Repetitive avalanche energy L=0.1mH [C]		E_{AR}	88	mJ
Power Dissipation [B]	T_C=25℃	P_D	62.5	W
	T_C=100℃		31	
Power Dissipation [A]	T_A=25℃	P_{DSM}	2.5	
	T_A=70℃		1.6	
Junction and Storage Temperature Range		T_J, T_{STG}	-55 to 175	℃

Thermal Characteristics

Parameter		Symbol	Typ	Max	Units
Maximum Junction-to-Ambient [A,G]	t ≤ 10s	$R_{\theta JA}$	15	20	℃/W
Maximum Junction-to-Ambient [A,G]	Steady-State		41	50	℃/W
Maximum Junction-to-Case [D,F]	Steady-State	$R_{\theta JC}$	2	2.4	℃/W

Electrical Characteristics (T_J=25°C unless otherwise noted)

Symbol	Parameter	Conditions	Min	Typ	Max	Units
STATIC PARAMETERS						
BV_{DSS}	Drain-Source Breakdown Voltage	I_D=-250µA, V_{GS}=0V	-40			V
I_{DSS}	Zero Gate Voltage Drain Current	V_{DS}=-40V, V_{GS}=0V			-1	µA
		T_J=55°C			-5	
I_{GSS}	Gate-Body leakage current	V_{DS}=0V, V_{GS}= ±20V			±100	nA
$V_{GS(th)}$	Gate Threshold Voltage	V_{DS}=V_{GS} I_D=-250µA	-1.7	-1.9	-3	V
$I_{D(ON)}$	On state drain current	V_{GS}=-10V, V_{DS}=-5V	-115			A
$R_{DS(ON)}$	Static Drain-Source On-Resistance	V_{GS}=-10V, I_D=-20A		12.5	15	mΩ
		T_J=125°C		19	23	
		V_{GS}=-4.5V, I_D=-15A		16	20	
g_{FS}	Forward Transconductance	V_{DS}=-5V, I_D=-20A		50		S
V_{SD}	Diode Forward Voltage	I_S=-1A,V_{GS}=0V		-0.72	-1	V
I_S	Maximum Body-Diode Continuous Current				-20	A
DYNAMIC PARAMETERS						
C_{iss}	Input Capacitance	V_{GS}=0V, V_{DS}=-20V, f=1MHz		2550		pF
C_{oss}	Output Capacitance			280		pF
C_{rss}	Reverse Transfer Capacitance			190		pF
R_g	Gate resistance	V_{GS}=0V, V_{DS}=0V, f=1MHz	2.5	4	6	Ω
SWITCHING PARAMETERS						
Q_g (-10V)	Total Gate Charge	V_{GS}=-10V, V_{DS}=-20V, I_D=-20A		42	55	nC
Q_g (-4.5V)	Total Gate Charge			18.6		
Q_{gs}	Gate Source Charge			7		nC
Q_{gd}	Gate Drain Charge			8.6		nC
$t_{D(on)}$	Turn-On DelayTime	V_{GS}=-10V, V_{DS}=-20V, R_L=1Ω, R_{GEN}=3Ω		9.4		ns
t_r	Turn-On Rise Time			20		ns
$t_{D(off)}$	Turn-Off DelayTime			55		ns
t_f	Turn-Off Fall Time			30		ns
t_{rr}	Body Diode Reverse Recovery Time	I_F=-20A, dI/dt=100A/µs		38	49	ns
Q_{rr}	Body Diode Reverse Recovery Charge	I_F=-20A, dI/dt=100A/µs		47		nC

A: The value of $R_{\theta JA}$ is measured with the device in a still air environment with T_A =25° C. The power dissipation P_{DSM} and current rating I_{DSM} are based on $T_{J(MAX)}$=150° C, using steady state junction-to-ambient thermal resistance.
B. The power dissipation P_D is based on $T_{J(MAX)}$=175° C, using junction-to-case thermal resistance, and is more useful in setting the upper dissipation limit for cases where additional heatsinking is used.
C: Repetitive rating, pulse width limited by junction temperature $T_{J(MAX)}$=175° C.
D. The $R_{\theta JA}$ is the sum of the thermal impedence from junction to case $R_{\theta JC}$ and case to ambient.
E. The static characteristics in Figures 1 to 6 are obtained using <300 µs pulses, duty cycle 0.5% max.
F. These curves are based on the junction-to-case thermal impedence which is measured with the device mounted to a large heatsink, assuming a maximum junction temperature of $T_{J(MAX)}$=175° C. The SOA curve provides a single pulse rating.
G. These tests are performed with the device mounted on 1 in^2 FR-4 board with 2oz. Copper, in a still air environment with T_A=25° C.
H. The maximum current rating is limited by bond-wires.
*This device is guaranteed green after data code 8X11 (Sep 1ST 2008).
Rev4: April, 2012

COMPONENTS IN LIFE SUPPORT DEVICES OR SYSTEMS ARE NOT AUTHORIZED. AOS DOES NOT ASSUME ANY LIABILITY ARISING OUT OF SUCH APPLICATIONS OR USES OF ITS PRODUCTS. AOS RESERVES THE RIGHT TO IMPROVE PRODUCT DESIGN, FUNCTIONS AND RELIABILITY WITHOUT NOTICE.

TYPICAL ELECTRICAL AND THERMAL CHARACTERISTICS

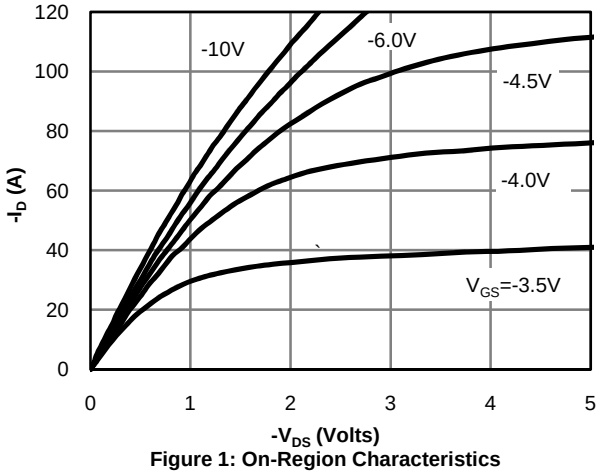

Figure 1: On-Region Characteristics

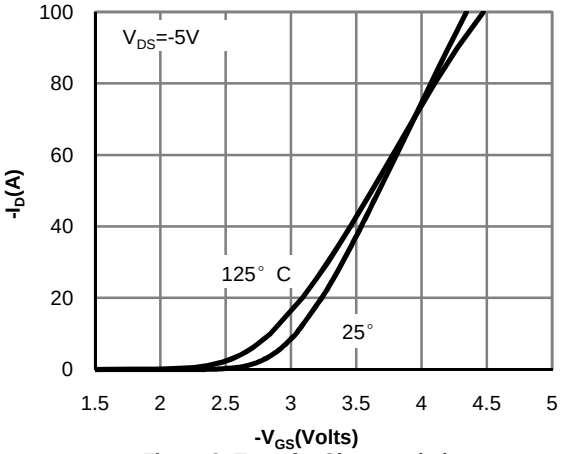

Figure 2: Transfer Characteristics

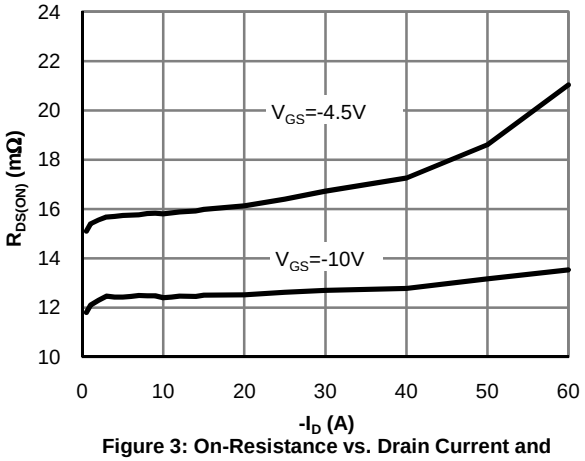

Figure 3: On-Resistance vs. Drain Current and Gate Voltage

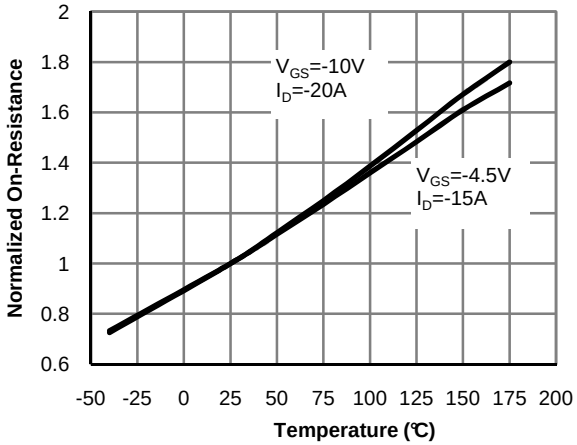

Figure 4: On-Resistance vs. Junction Temperature

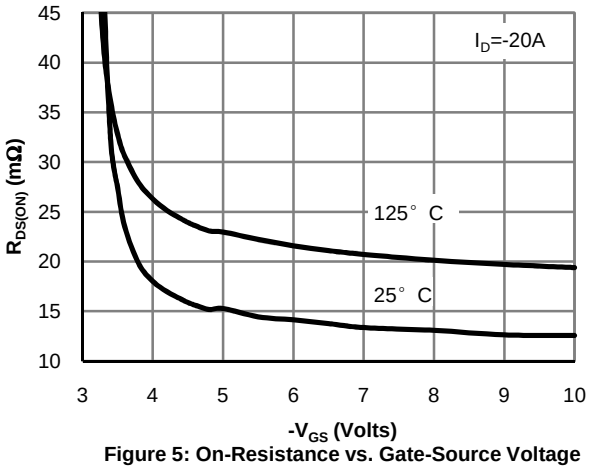

Figure 5: On-Resistance vs. Gate-Source Voltage

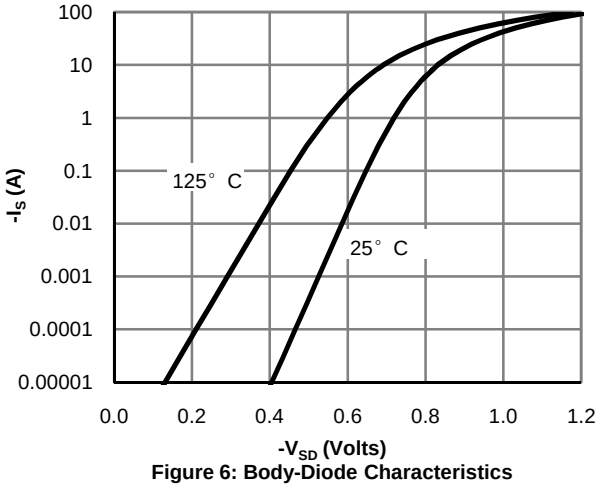

Figure 6: Body-Diode Characteristics

TYPICAL ELECTRICAL AND THERMAL CHARACTERISTICS

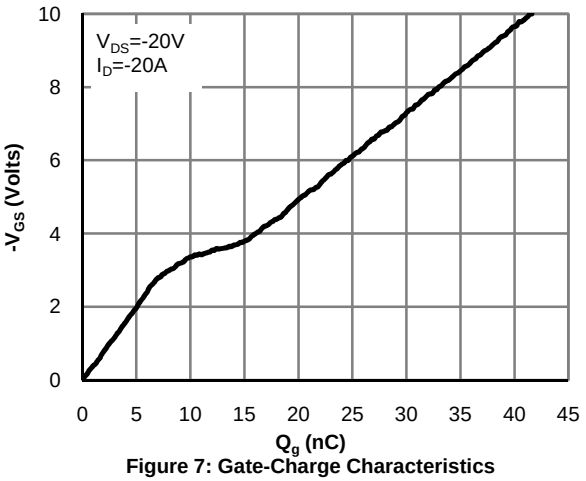

Figure 7: Gate-Charge Characteristics

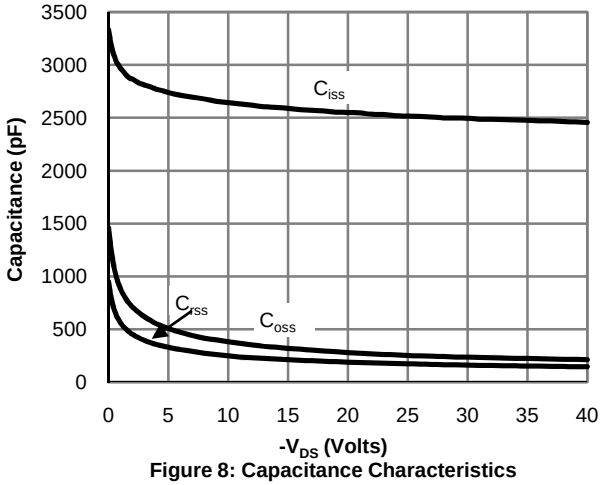

Figure 8: Capacitance Characteristics

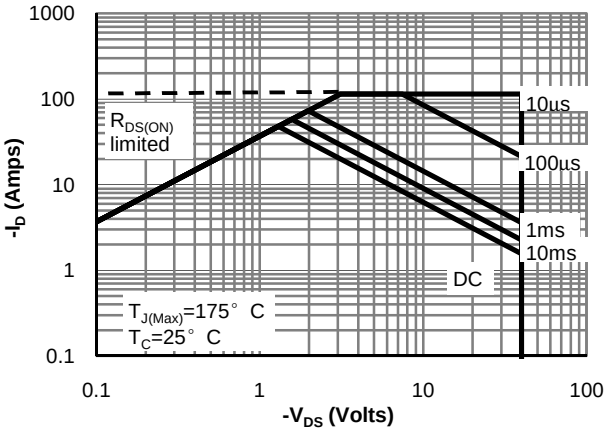

Figure 9: Maximum Forward Biased Safe Operating Area (Note F)

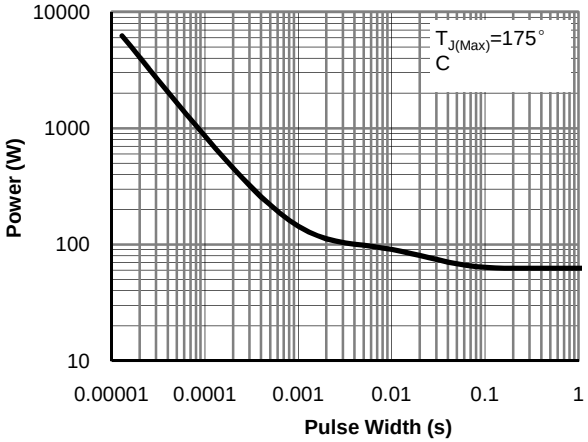

Figure 10: Single Pulse Power Rating Junction-to-Case (Note F)

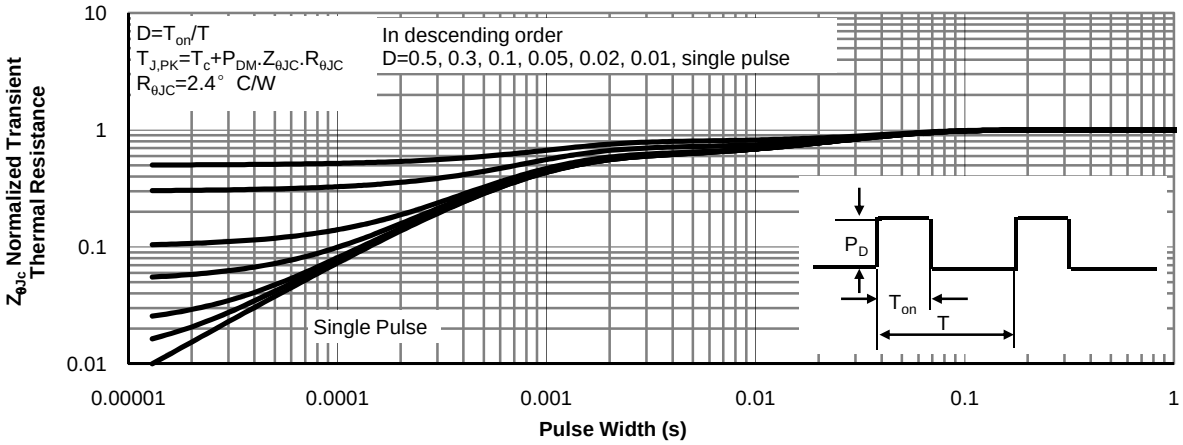

Figure 11: Normalized Maximum Transient Thermal Impedance (Note F)

TYPICAL ELECTRICAL AND THERMAL CHARACTERISTICS

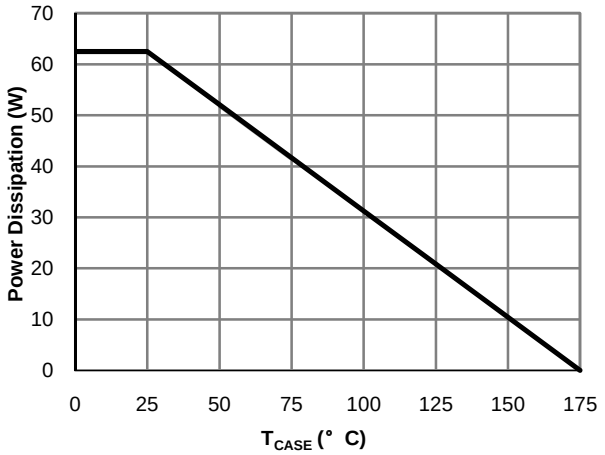

Figure 12: Power De-rating (Note B)

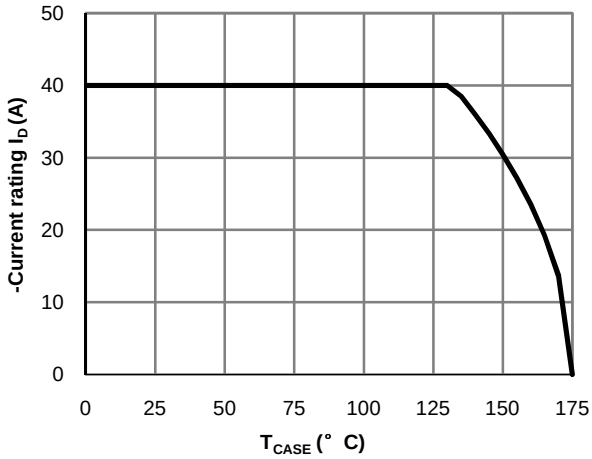

Figure 13: Current De-rating (Note B)

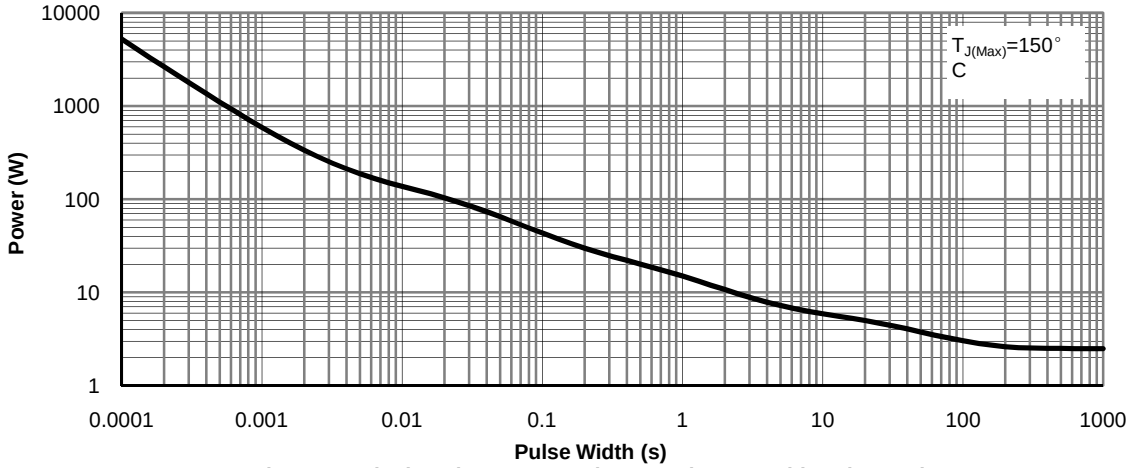

Figure 14: Single Pulse Power Rating Junction-to-Ambient (Note G)

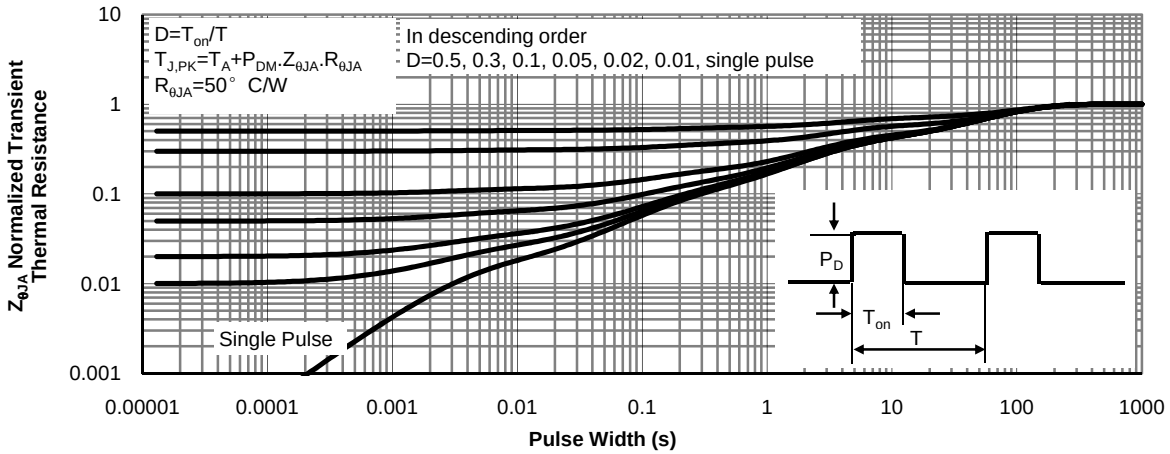

Figure 15: Normalized Maximum Transient Thermal Impedance (Note G)

Gate Charge Test Circuit & Waveform

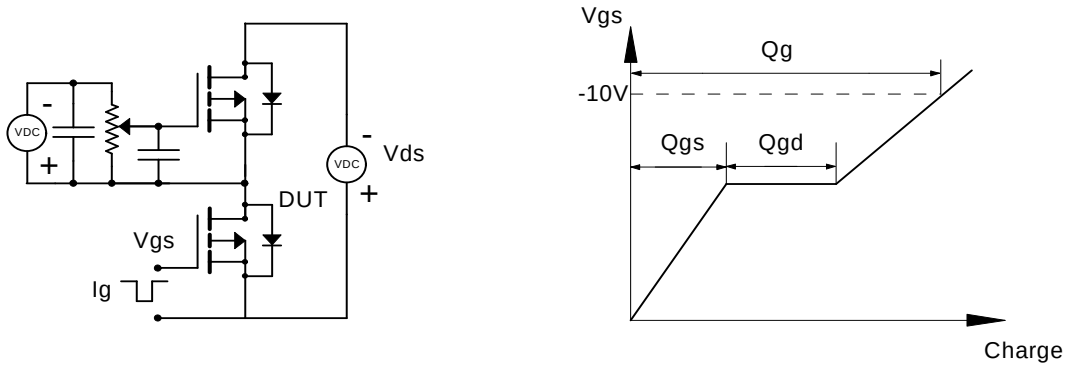

Resistive Switching Test Circuit & Waveforms

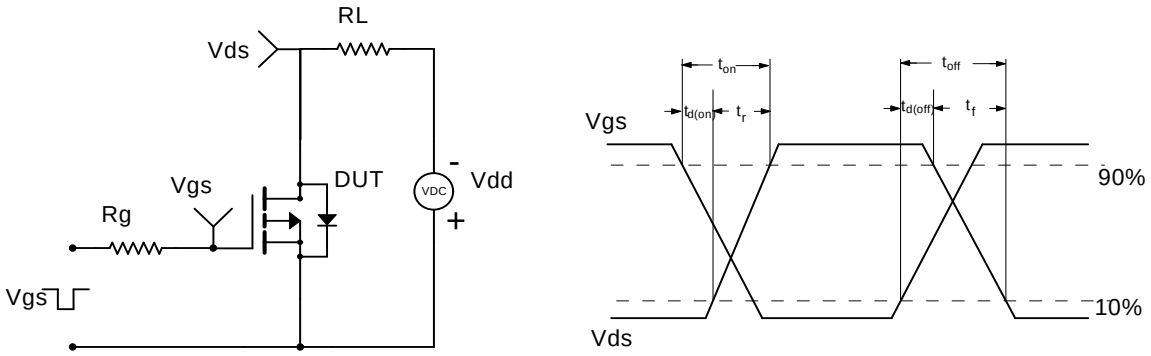

Unclamped Inductive Switching (UIS) Test Circuit & Waveforms

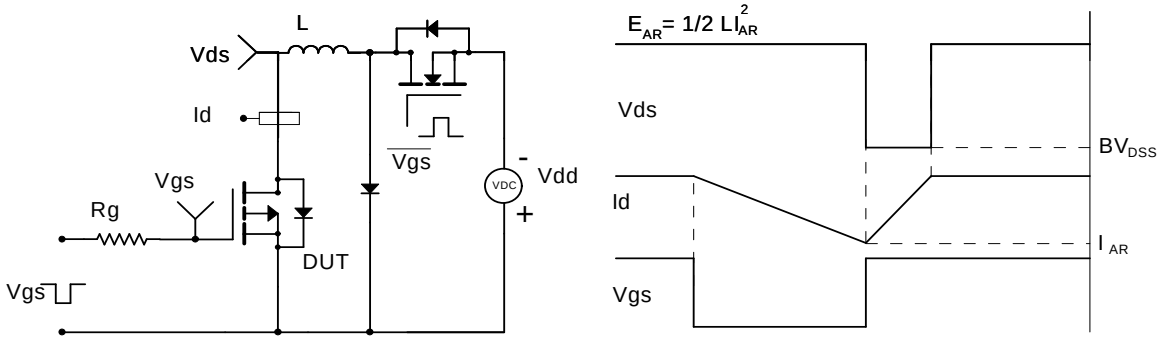
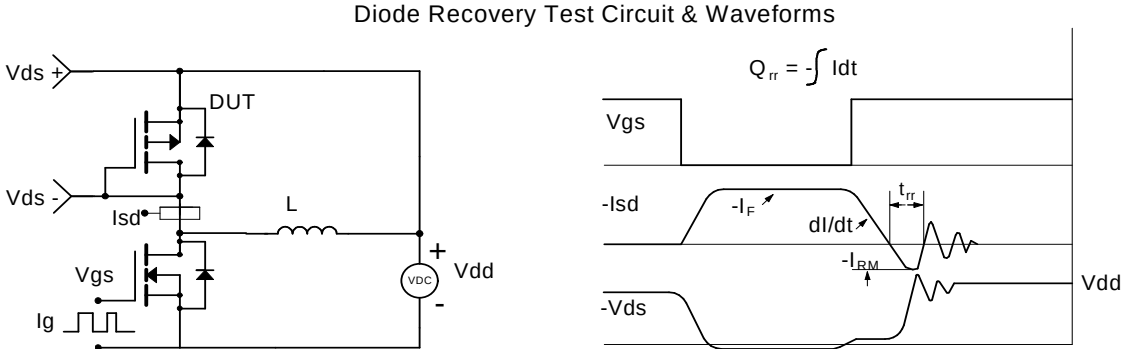
Diode Recovery Test Circuit & Waveforms