ALPHA & OMEGA SEMICONDUCTOR

AOT2N60/AOTF2N60

600V,2A N-Channel MOSFET

General Description

The AOT2N60 & AOTF2N60 have been fabricated using an advanced high voltage MOSFET process that is designed to deliver high levels of performance and robustness in popular AC-DC applications.
By providing low $R_{DS(on)}$, C_{iss} and C_{rss} along with guaranteed avalanche capability these parts can be adopted quickly into new and existing offline power supply designs.

For Halogen Free add "L" suffix to part number:
AOT2N60L & AOTF2N60L

Product Summary

V_{DS}	700V@150℃
I_D (at V_{GS}=10V)	2A
$R_{DS(ON)}$ (at V_{GS}=10V)	< 4.4Ω

100% UIS Tested
100% R_g Tested

RoHS Compliant

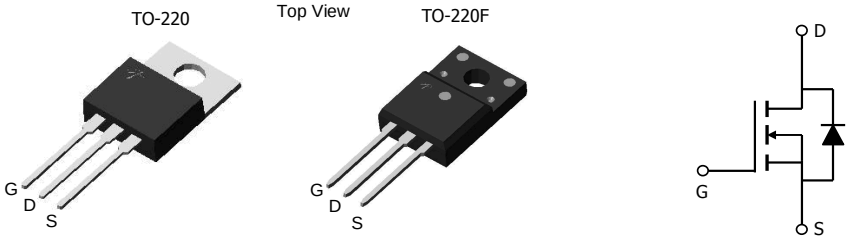

Absolute Maximum Ratings T_A=25℃ unless otherwise noted

Parameter		Symbol	AOT2N60	AOTF2N60	Units
Drain-Source Voltage		V_{DS}	600		V
Gate-Source Voltage		V_{GS}	±30		V
Continuous Drain Current	T_C=25℃	I_D	2	2*	A
	T_C=100℃		1.7	1.7*	
Pulsed Drain Current [C]		I_{DM}	8		
Avalanche Current [C]		I_{AR}	2		A
Repetitive avalanche energy [C]		E_{AR}	60		mJ
Single plused avalanche energy [G]		E_{AS}	120		mJ
Peak diode recovery dv/dt		dv/dt	5		V/ns
Power Dissipation [B]	T_C=25℃	P_D	74	31	W
	Derate above 25°C		0.6	0.25	W/ °C
Junction and Storage Temperature Range		T_J, T_{STG}	-55 to 150		℃
Maximum lead temperature for soldering purpose, 1/8" from case for 5 seconds		T_L	300		℃

Thermal Characteristics

Parameter	Symbol	AOT2N60	AOTF2N60	Units
Maximum Junction-to-Ambient [A,D]	$R_{\theta JA}$	65	65	℃/W
Maximum Case-to-sink [A]	$R_{\theta CS}$	0.5	--	℃/W
Maximum Junction-to-Case	$R_{\theta JC}$	1.7	4	℃/W

* Drain current limited by maximum junction temperature.

Electrical Characteristics (T_J=25℃ unless otherwise noted)

Symbol	Parameter	Conditions	Min	Typ	Max	Units
STATIC PARAMETERS						
BV_{DSS}	Drain-Source Breakdown Voltage	I_D=250µA, V_{GS}=0V, T_J=25℃	600			V
		I_D=250µA, V_{GS}=0V, T_J=150℃		700		
BV_{DSS} /ΔTJ	Zero Gate Voltage Drain Current	ID=250µA, VGS=0V		0.56		V/ °C
I_{DSS}	Zero Gate Voltage Drain Current	V_{DS}=600V, V_{GS}=0V			1	µA
		V_{DS}=480V, T_J=125℃			10	
I_{GSS}	Gate-Body leakage current	V_{DS}=0V, V_{GS}=±30V			±100	nA
$V_{GS(th)}$	Gate Threshold Voltage	V_{DS}=5V I_D=250µA	3	4	4.5	V
$R_{DS(ON)}$	Static Drain-Source On-Resistance	V_{GS}=10V, I_D=1A		3.6	4.4	Ω
g_{FS}	Forward Transconductance	V_{DS}=40V, I_D=1A		3.5		S
V_{SD}	Diode Forward Voltage	I_S=1A,V_{GS}=0V		0.79	1	V
I_S	Maximum Body-Diode Continuous Current				2	A
I_{SM}	Maximum Body-Diode Pulsed Current				8	A
DYNAMIC PARAMETERS						
C_{iss}	Input Capacitance	V_{GS}=0V, V_{DS}=25V, f=1MHz	215	270	325	pF
C_{oss}	Output Capacitance		23	29	35	pF
C_{rss}	Reverse Transfer Capacitance		2.2	2.8	3.4	pF
R_g	Gate resistance	V_{GS}=0V, V_{DS}=0V, f=1MHz	3.5	4.4	6.6	Ω
SWITCHING PARAMETERS						
Q_g	Total Gate Charge	V_{GS}=10V, V_{DS}=480V, I_D=2A		9.5	11.4	nC
Q_{gs}	Gate Source Charge			1.9	2.3	nC
Q_{gd}	Gate Drain Charge			4.7	5.6	nC
$t_{D(on)}$	Turn-On DelayTime	V_{GS}=10V, V_{DS}=300V, I_D=2A, R_G=25Ω		17.2		ns
t_r	Turn-On Rise Time			14.3		ns
$t_{D(off)}$	Turn-Off DelayTime			27		ns
t_f	Turn-Off Fall Time			17		ns
t_{rr}	Body Diode Reverse Recovery Time	I_F=2A,dI/dt=100A/µs,V_{DS}=100V		154	185	ns
Q_{rr}	Body Diode Reverse Recovery Charge	I_F=2A,dI/dt=100A/µs,V_{DS}=100V		0.80	1	µC

A. The value of $R_{\theta JA}$ is measured with the device in a still air environment with T_A=25℃.

B. The power dissipation P_D is based on $T_{J(MAX)}$=150℃, using junction-to-case thermal resistance, and is more useful in setting the upper dissipation limit for cases where additional heatsinking is used.

C. Repetitive rating, pulse width limited by junction temperature $T_{J(MAX)}$=150℃, Ratings are based on low frequency and duty cycles to keep initial T_J =25℃.

D. The $R_{\theta JA}$ is the sum of the thermal impedence from junction to case $R_{\theta JC}$ and case to ambient.

E. The static characteristics in Figures 1 to 6 are obtained using <300 µs pulses, duty cycle 0.5% max.

F. These curves are based on the junction-to-case thermal impedence which is measured with the device mounted to a large heatsink, assuming a maximum junction temperature of $T_{J(MAX)}$=150℃. The SOA curve provides a single pulse ratin g.

G. L=60mH, I_{AS}=2A, V_{DD}=150V, R_G=25Ω, Starting T_J=25℃

THIS PRODUCT HAS BEEN DESIGNED AND QUALIFIED FOR THE CONSUMER MARKET. APPLICATIONS OR USES AS CRITICAL COMPONENTS IN LIFE SUPPORT DEVICES OR SYSTEMS ARE NOT AUTHORIZED. AOS DOES NOT ASSUME ANY LIABILITY ARISING OUT OF SUCH APPLICATIONS OR USES OF ITS PRODUCTS. AOS RESERVES THE RIGHT TO IMPROVE PRODUCT DESIGN, FUNCTIONS AND RELIABILITY WITHOUT NOTICE.

TYPICAL ELECTRICAL AND THERMAL CHARACTERISTICS

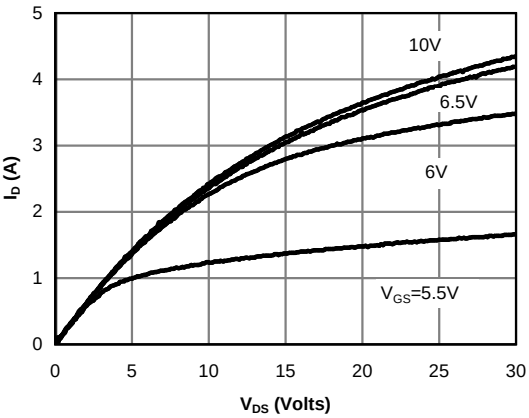

Fig 1: On-Region Characteristics

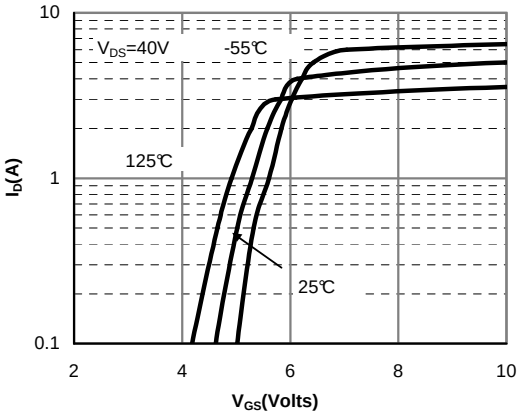

Figure 2: Transfer Characteristics

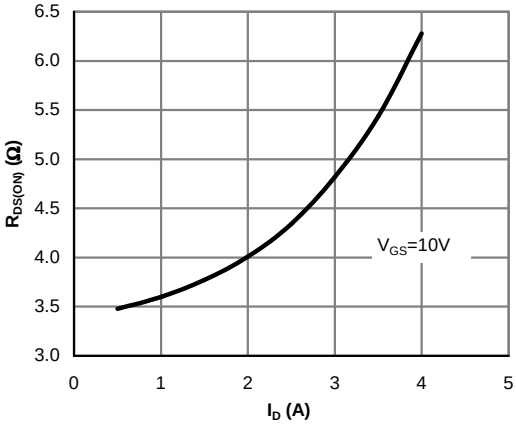

Figure 3: On-Resistance vs. Drain Current and Gate Voltage

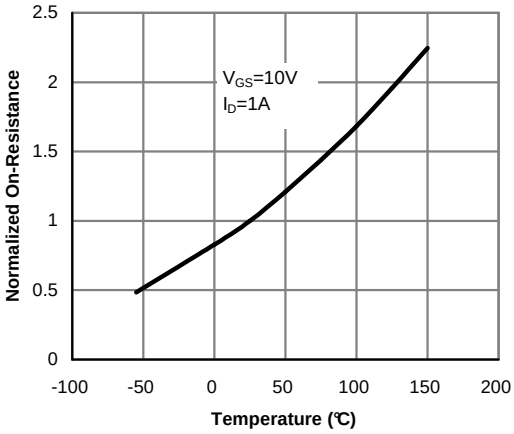

Figure 4: On-Resistance vs. Junction Temperature

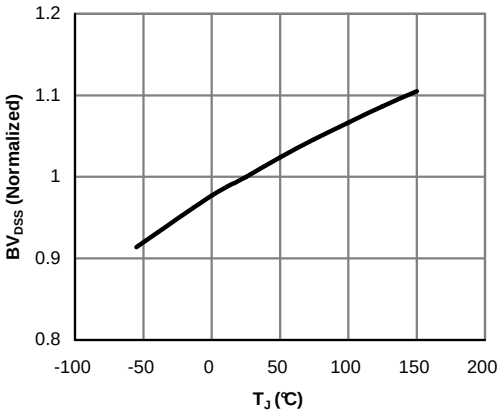

Figure 5:Break Down vs. Junction Temparature

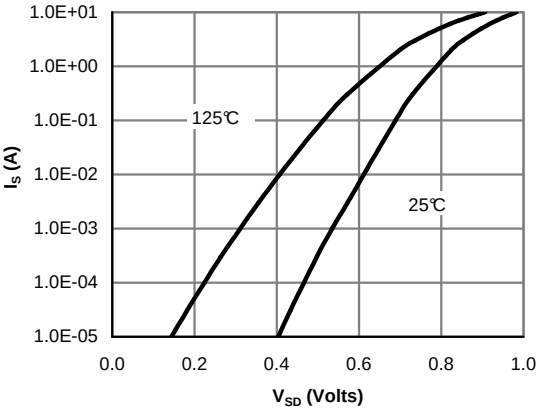

Figure 6: Body-Diode Characteristics (Note E)

TYPICAL ELECTRICAL AND THERMAL CHARACTERISTICS

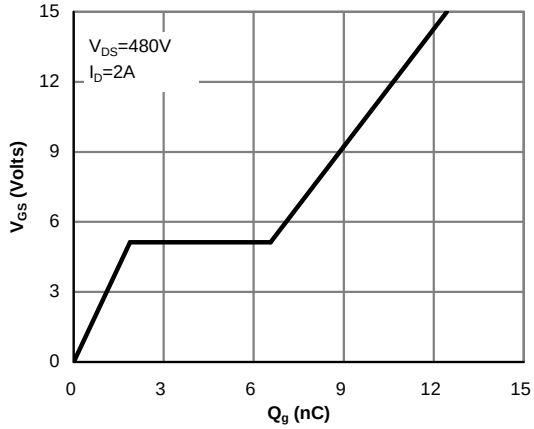

Figure 7: Gate-Charge Characteristics

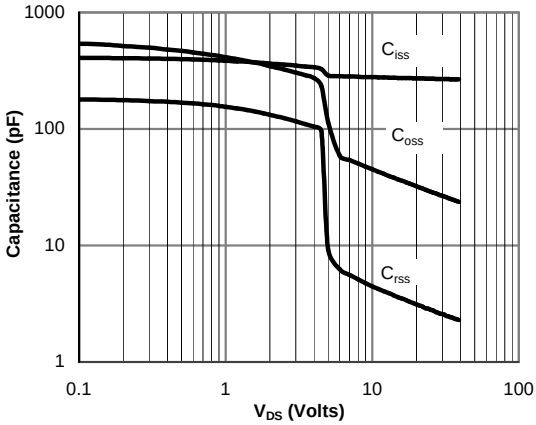

Figure 8: Capacitance Characteristics

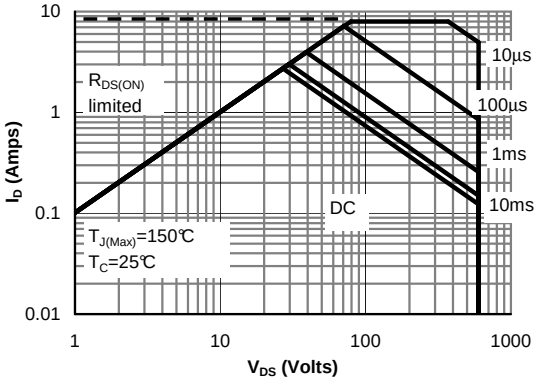

Figure 9: Maximum Forward Biased Safe Operating Area for AOT2N60 (Note F)

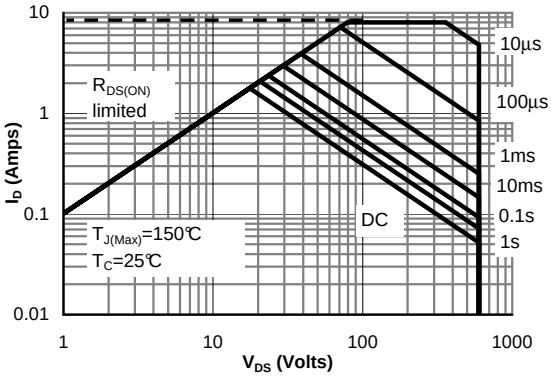

Figure 10: Maximum Forward Biased Safe Operating Area for AOTF2N60 (Note F)

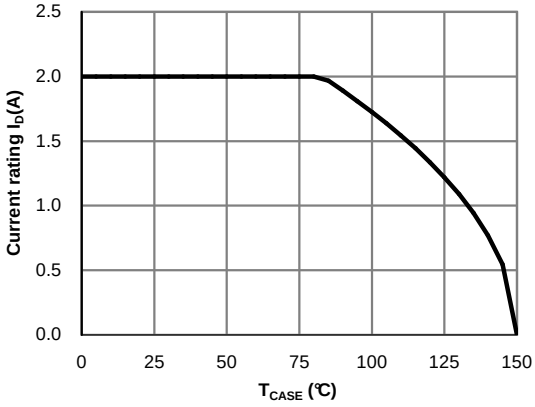

Figure 11: Current De-rating (Note B)

TYPICAL ELECTRICAL AND THERMAL CHARACTERISTICS

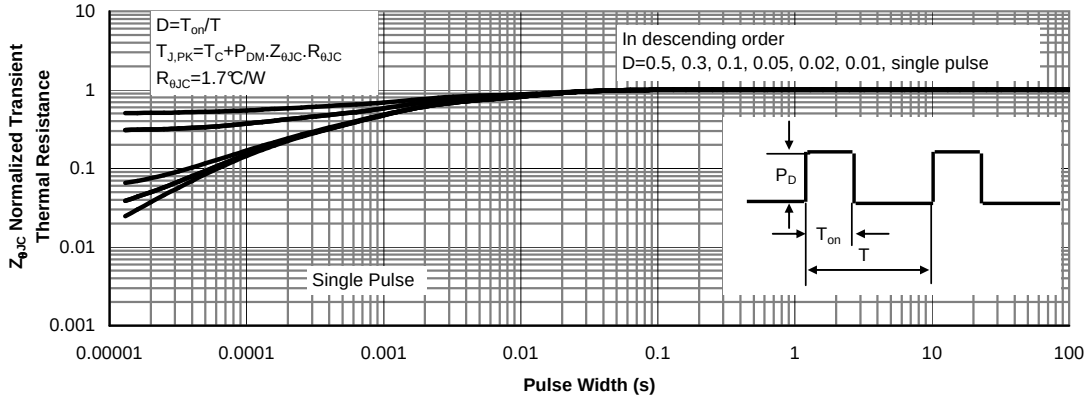

Figure 12: Normalized Maximum Transient Thermal Impedance for AOT2N60 (Note F)

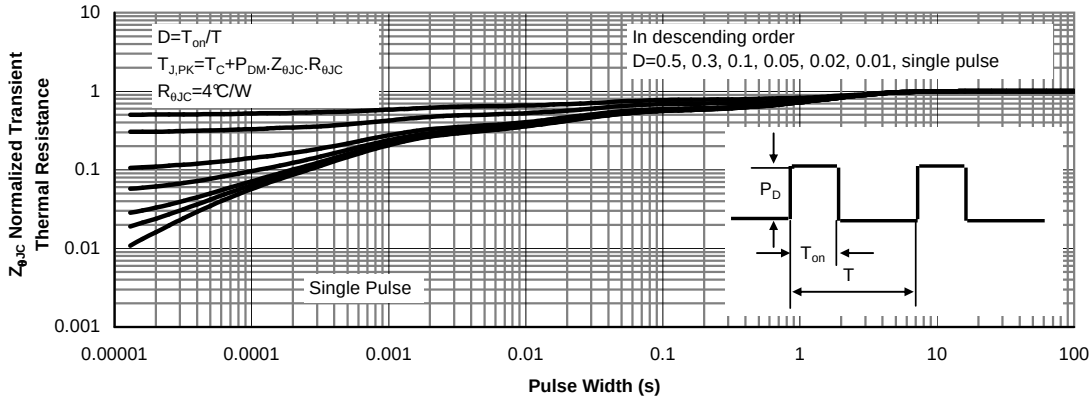

Figure 13: Normalized Maximum Transient Thermal Impedance for AOTF2N60 (Note F)

Gate Charge Test Circuit & Waveform

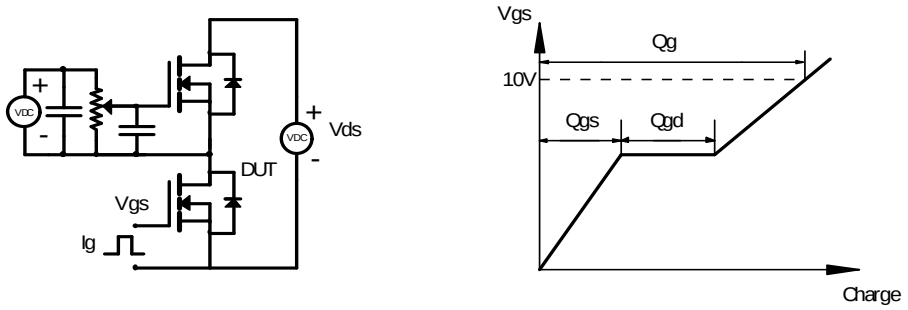

Resistive Switching Test Circuit & Waveforms

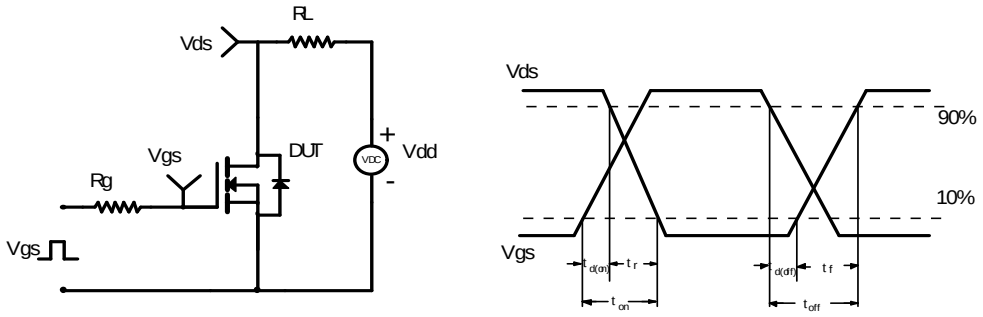

Unclamped Inductive Switching (UIS) Test Circuit & Waveforms

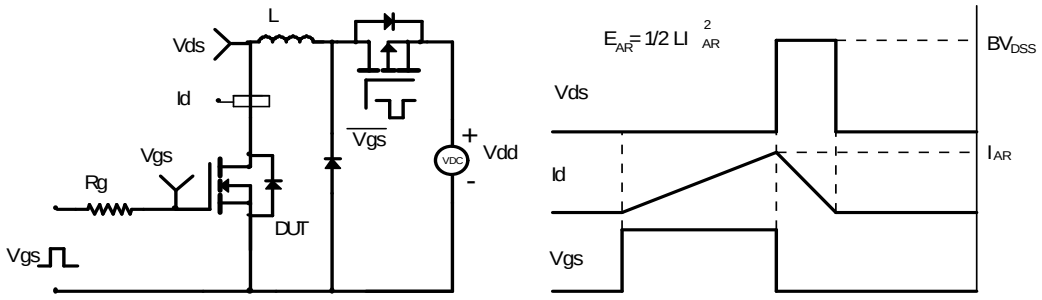
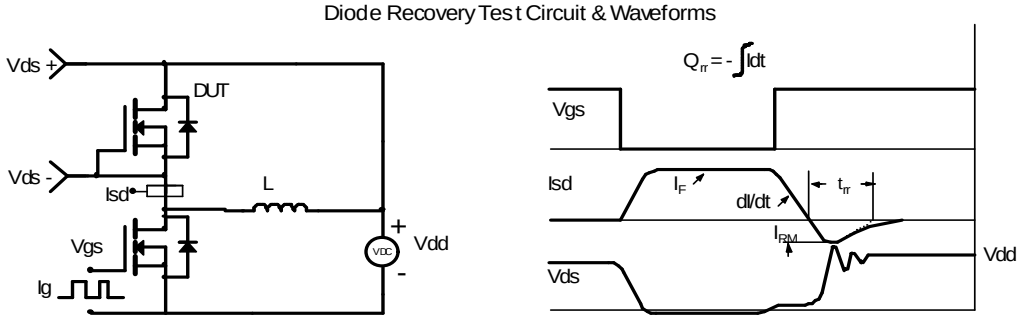
Diode Recovery Test Circuit & Waveforms