AOZ6236

0.35 Ω Low-Voltage Dual SPDT Analog Switch

General Description

The AOZ6236 is a 0.35 Ω low-voltage Dual Single Pole Double Throw (SPDT) analog switch. The AOZ6236 operates from a single 1.65 V to 4.3 V supply. It features an ultra-low On Resistance of 0.35 Ω at a +3.0 V supply and 25 ℃. The AOZ6236 is designed for break-before-make operation.

Features

- Typical 0.35 Ω On Resistance (R_{ON}) for +3.0 V supply
- 0.15 Ω maximum R_{ON} flatness for +3.0 V supply
- QFN-10: 1.8mm x 1.4 mm x 0.55 mm package
- Broad V_{CC} operating range: 1.65 V to 4.3 V
- High current handling capability (350 mA continuous current under 3.3 V supply)

Applications

- Cell phone
- PDA
- Portable media player

Typical Application

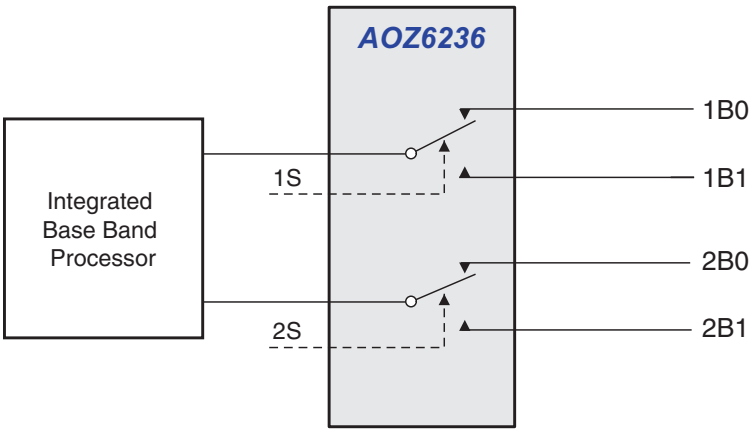

Connection Diagram

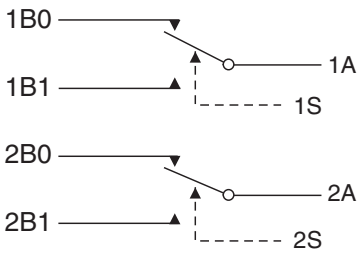

Ordering Information

Part Number	Ambient Temperature Range	Package	Environmental
AOZ6236QI	-40 ℃ to +85 ℃	QFN-10	RoHS Compliant Green Product

AOS Green Products use reduced levels of Halogens, and are also RoHS compliant.
Please visit www.aosmd.com/web/quality/rohs_compliant.jsp for additional information.

Pin Configuration

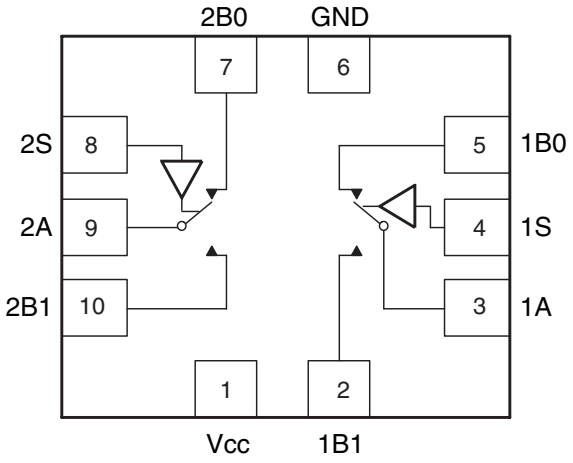

TQFN-10
(Top Thru View)

Pin Description

Pin Name	Function
1A, 2A, 1B0, 1B1, 2B0, 2B1	Data Ports
1S, 2S	Control Input

Truth Table

Logic Input	Function
0	B0 Connected to A
1	B1 Connected to A

Absolute Maximum Ratings

Exceeding the Absolute Maximum Ratings may damage the device.

Symbol	Parameter	Rating
V_{CC}	Supply Voltage	-0.5 V to +5.5 V
V_{SW}	Switch Voltage(1)	-0.5 V to V_{CC} + 0.5 V
V_{IN}	Input Voltage(1)	-0.5 V to V_{CC}
I_{IK}	Minimum Input Diode Current(2)	-50 mA
I_{SW}	Switch Current	350 mA
I_{SWPEAK}	Peak Switch Current (Pulsed at 1 ms duration, < 10 % Duty Cycle)	500 mA
T_{STG}	Storage Temperature Range	-65 ℃ to +150 ℃
T_J	Maximum Junction Temperature	+150 ℃
T_L	Lead Temperature (Soldering, 10 seconds)	+260 ℃
ESD	Human Body Model	8000 V
	Charged Device Model	1000 V

Recommended Operating Conditions

The device is not guaranteed to operate beyond the Recommended Operating Conditions.

Symbol	Parameter	Rating
V_{CC}	Supply Voltage	1.65 V to +4.3 V
V_{IN}	Control Input Voltage(3)	0 V to V_{CC}
V_{SW}	Switch Input Voltage	0 V to V_{CC}
T_A	Operating Temperature	-40 ℃ to +85 ℃

Notes:

1. The input and output negative voltage ratings may be exceeded if the input and output diode current ratings are observed.
2. Negative current should not exceed minimum negative value.
3. Unused inputs must be held HIGH or LOW. They may not float.

DC Electrical Characteristics

All typical values are at 25℃ unless otherwise specified.

Symbol	Parameter	Conditions	V_{CC} (V)	Min.	Typ.	Max.	Units
V_{IH}	Input Voltage HIGH		3.6 to 4.3	1.7			V
			2.7 to 3.6	1.5			
			2.3 to 2.7	1.4			
			1.65 to 1.95	0.9			
V_{IL}	Input Voltage LOW		3.6 to 4.3			0.7	V
			2.7 to 3.6			0.5	
			2.3 to 2.7			0.4	
			1.65 to 1.95			0.4	
I_{IN}	Control Input Leakage	V_{IN} = 0 V to V_{CC}	1.65 to 3.6	-0.5		0.5	µA
$I_{NO(OFF)}$, $I_{NC(OFF)}$	Off-Leakage Current of Port nB_0 and nB_1	nA = 0.3 V, 3.3 V, nB0 or nB1 = 0.3 V, 3.3 V or floating	4.3	-50		50	nA
			3.6	-50		50	
		nA = 0.3 V, 2.4 V, nB0 or nB1 = 0.3 V, 2.4 V or floating	2.7	-50		50	
		nA = 0.3 V, 1.65 V, nB0 or nB1 = 0.3 V, 1.65 V or floating	1.95	-50		50	
$I_{A(ON)}$	On Leakage Current of Port 1A and 2A	nA = 0.3 V, 3.3 V, nB0 or nB1 = 0.3 V, 3.3 V or floating	4.3	-50		50	nA
			3.6	-50		50	
		nA = 0.3 V, 2.4 V, nB0 or nB1 = 0.3 V, 2.4 V or floating	2.7	-50		50	
		nA = 0.3 V, 1.65 V, nB0 or nB1 = 0.3 V, 1.65 V or floating	1.95	-100		100	
R_{ON}	Switch On Resistance(4) See Figure 5	I_{OUT} = 100 mA, nB0 or nB1 = 0 V, 0.7 V, 3.6 V, 4.3 V	4.3		0.25	0.40	Ω
		I_{OUT} = 100 mA, nB0 or nB1 = 0 V, 0.7 V, 2.3 V, 3.0 V	3.0		0.35	0.50	
		I_{OUT} = 100 mA, nB0 or nB_1 = 0 V, 0.7 V, 2.0 V, 2.7 V	2.7		0.40	0.60	
		I_{OUT} = 100 mA, nB0 or nB1 = 0 V, 0.7 V, 1.6 V, 2.3 V	2.3		0.50	0.70	
		I_{OUT} = 100 mA, nB0 or nB1 = 0 V, 0.7 V, 1.65 V	1.65		1.0	2.5	
ΔR_{ON}	On Resistance Matching Between Channels(5)	I_{OUT} = 100 mA, nB0 or nB1 = 0.7 V	4.3		0.02	0.13	Ω
			3.0		0.02	0.13	
			2.7		0.02	0.13	
			2.3		0.02		
			1.65		1.0		
$R_{FLAT(ON)}$	On Resistance Flatness(6)	I_{OUT} = 100 mA, nB0 or nB1 = 0 V to V_{CC}	4.3		0.06	0.15	Ω
			3.0		0.06	0.15	
			2.7		0.09	0.15	
			2.3		0.18		
			1.65		2.0		
I_{CC}	Quiescent Supply Current	V_{IN} = 0 V or V_{CC}, I_{OUT} = 0 A	3.6	-500		500	nA
I_{CCT}	Increase in I_{CC} per Input	Input at 2.6 V	4.3		4.0	20.0	µA
		Input at 1.8 V			13.0	25.0	

Notes:

4. On resistance is determined by the voltage drop between A and B pins at the indicated current through the switch.
5. $\Delta R_{ON} = R_{ONmax} - R_{ONmin}$ measured at identical V_{CC}, temperature, and voltage.
6. Flatness is defined as the difference between the maximum and minimum value of R_{ON} over the specified range of conditions.

AC Electrical Characteristics

All typical values are at 25℃ unless otherwise specified.

Symbol	Parameter	Conditions	V_{CC} (V)	Min.	Typ.	Max.	Units
t_{ON}	Turn-On Time	nB0 or nB1 = 1.5 V, R_L = 50 Ω, C_L = 35 pF	3.6 to 4.3		45	60	ns
			2.7 to 3.6		50	70	
			2.3 to 2.7		95	100	
			1.65 to 1.95		160		
t_{OFF}	Turn-Off Time	nB0 or nB1 = 1.5 V, R_L = 50 Ω, C_L = 35 pF	3.6 to 4.3		30	35	ns
			2.7 to 3.6		35	40	
			2.3 to 2.7		60	65	
			1.65 to 1.95		110		
t_{BBM}	Break-Before-Make Time	nB0 or nB1 = 1.5 V, R_L = 50 Ω, C_L = 35 pF	3.6 to 4.3	2.0	15.0		ns
			2.7 to 3.6	2.0	15.0		
			2.3 to 2.7	2.0	20.0		
			1.65 to 1.95	2.0	25.0		
Q	Charge Injection	C_L = 100 pF, V_{GEN} = 0 V, R_{GEN} = 0 Ω	1.65 to 4.3		40		pC
OIRR	Off Isolation	f = 100 kHz, R_L = 50 Ω, C_L = 5 pF (Stray)	1.65 to 4.3		-70.0		dB
Xtalk	Crosstalk	f = 100 kHz, R_L = 50 Ω, C_L = 5 pF (Stray)	1.65 to 4.3		-70.0		dB
BW	-3dB Bandwidth	R_L = 50 Ω	1.65 to 4.3		> 50		MHz
THD	Total Harmonic Distortion	R_L = 32 Ω, V_{IN} = 2 V_{pk-pk}, f = 20 Hz to 20 kHz	2.7 to 4.3		0.01		%

Capacitance

Symbol	Parameter	Conditions	V_{CC} (V)	Min.	Typ.	Max.	Units
C_{IN}	Control Pin Input Capacitance	f = 1 MHz Vbias = 1.5 V	0.0		2		pF
C_{OFF}	B Port Off Capacitance	f = 1 MHz Vbias = 1.5 V	3.3		15		pF
C_{ON}	A Port On Capacitance	f = 1 MHz Vbias = 1.5 V	3.3		110		pF

Typical Performance Characteristics

$r_{DS(on)}$ vs. VD - Analog Voltage @ 25 °C

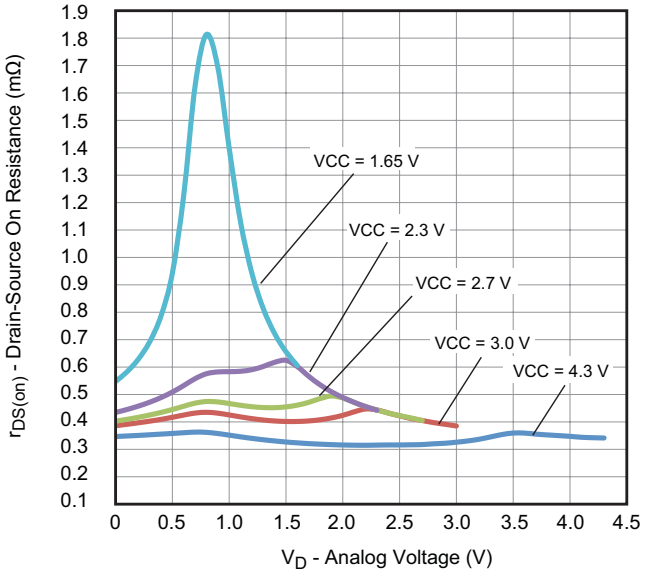

$r_{DS(on)}$ vs. VD - Analog Voltage @ 85 °C

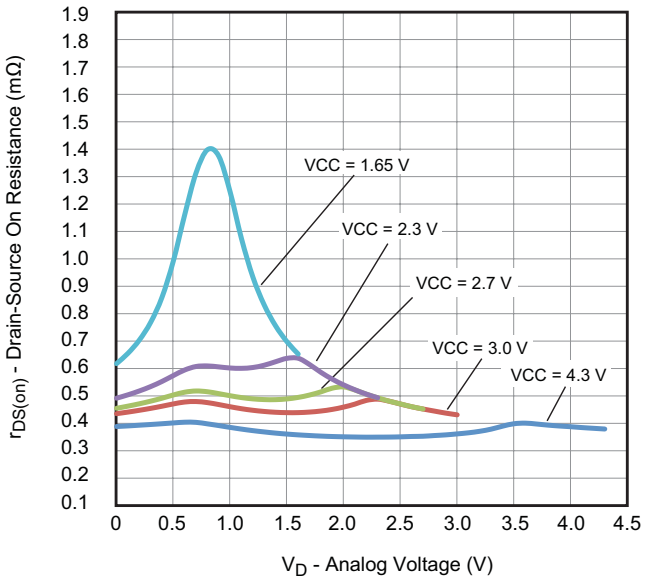

Crosstalk and Off Isolation vs. Frequency

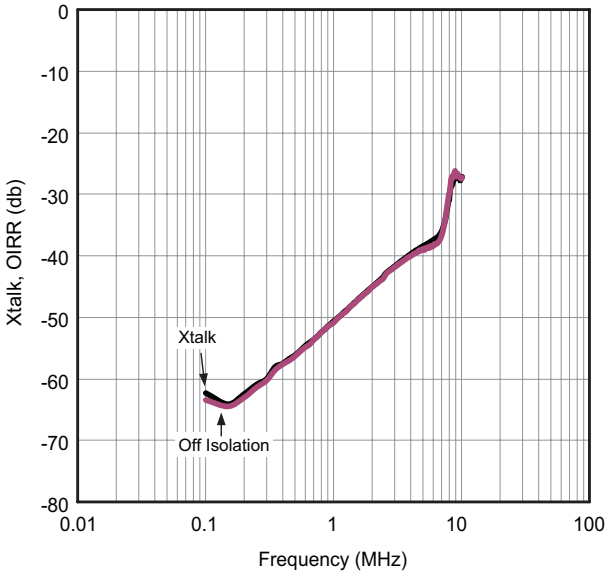

Insertion Loss vs. Frequency

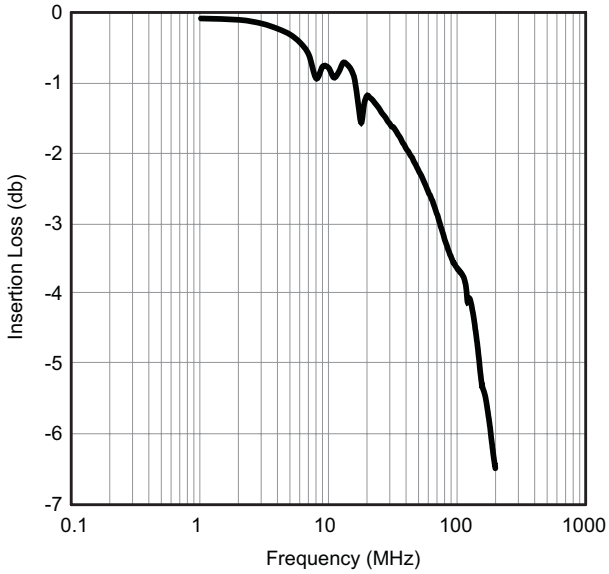

AC Loading and Waveforms

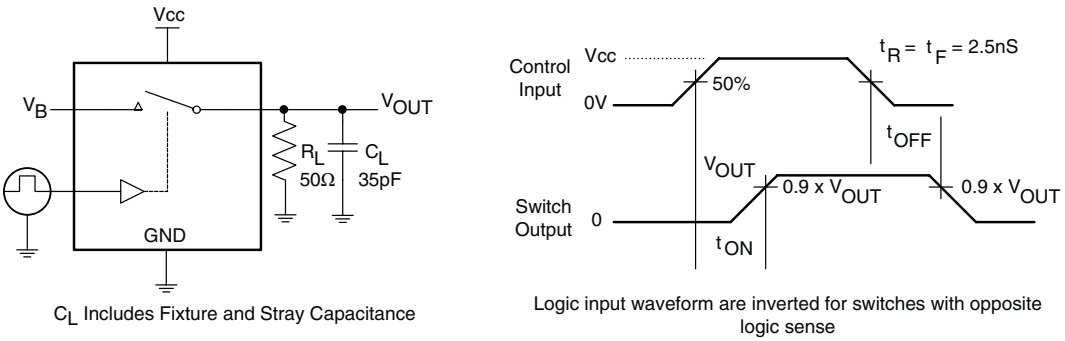

Figure 1. Turn-On/Turn-Off Timing

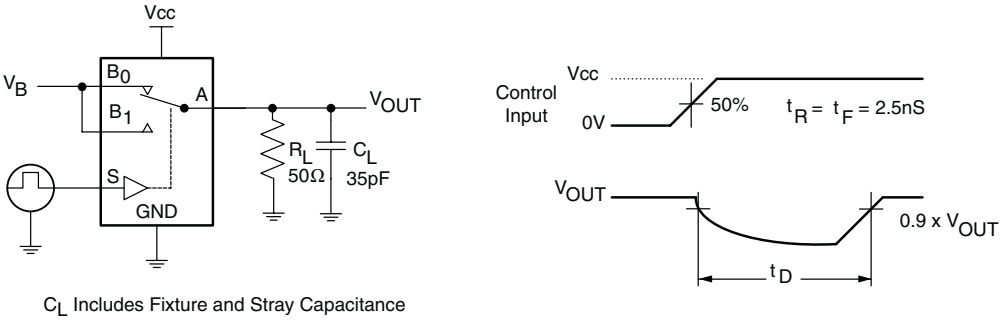

Figure 2. Break-Before-Make Timing`

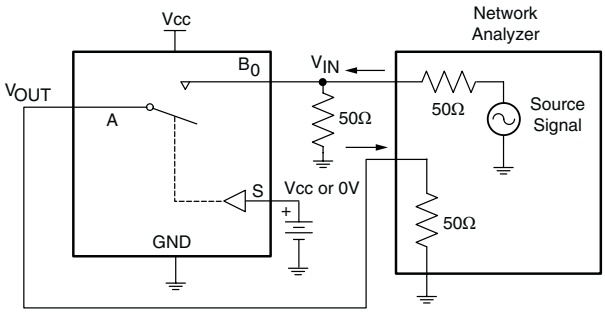

Figure 3. Off Isolation

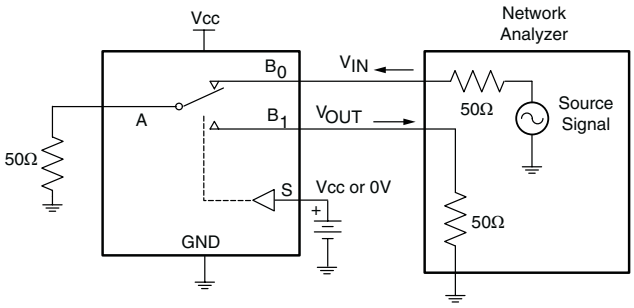

Figure 4. Crosstalk

AC Loading and Waveforms (continued)

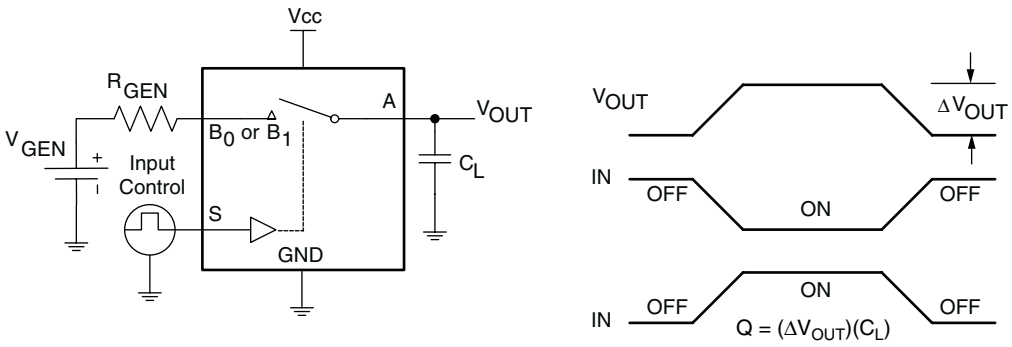

Figure 5. Charge Injection

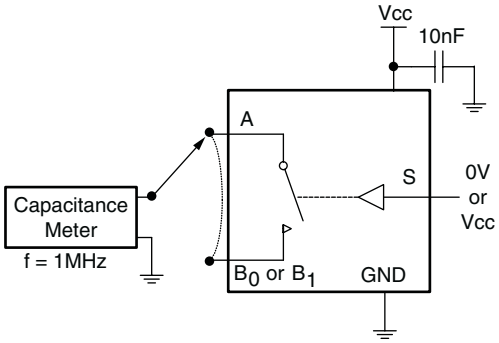

Figure 6. ON/Off Capacitance Measurement

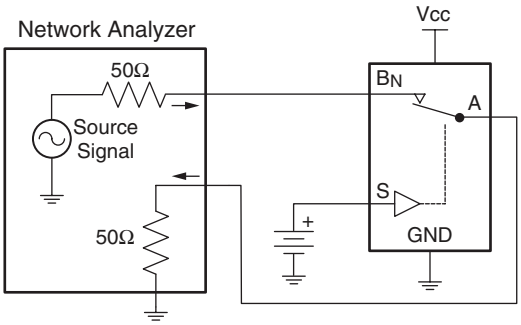

Figure 7. Bandwidth

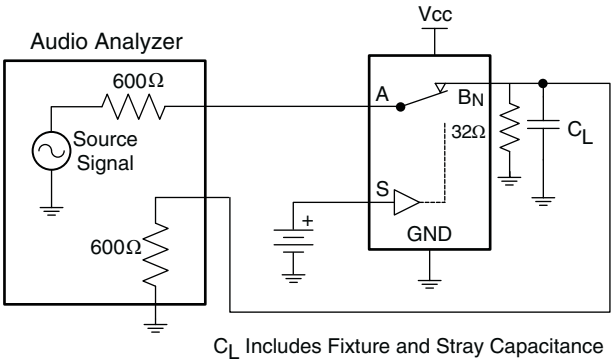

Figure 8. Harmonic Distortion

Package Dimensions, QFN 1.8 x 1.4 x 0.55, 10L

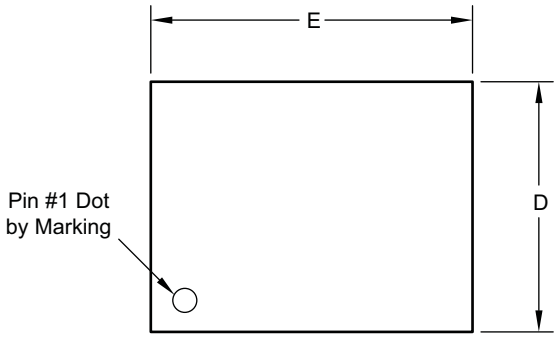

Top View

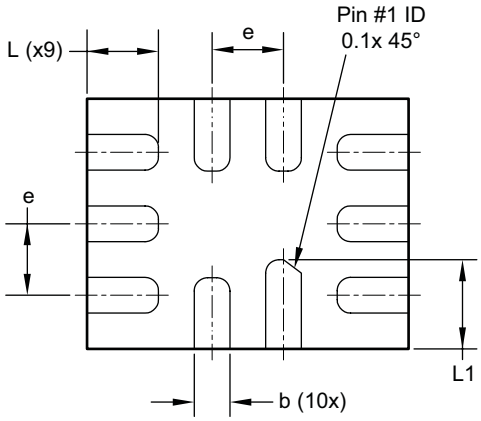

Bottom View

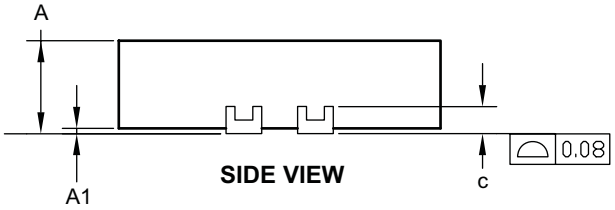

SIDE VIEW

RECOMMENDED LAND PATTERN

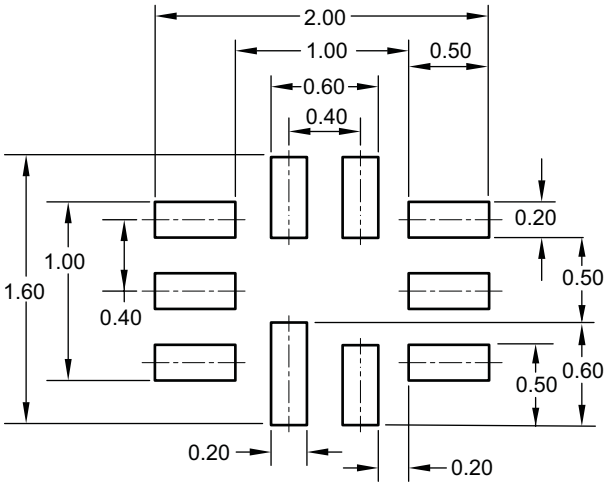

UNIT: mm

Dimensions in millimeters

Symbols	Min.	Nom.	Max.
A	0.50	0.55	0.60
A1	0.00	—	0.05
b	0.15	0.20	0.25
c	0.152 REF.		
D	1.35	1.40	1.45
E	1.75	1.80	1.85
e	0.40 BSC		
L	0.35	0.40	0.45
L1	0.50 REF.		

Dimensions in inches

Symbols	Min.	Nom.	Max.
A	0.020	0.022	0.024
A1	0.000	—	0.002
b	0.006	0.008	0.010
c	0.006 REF.		
D	0.053	0.055	0.057
E	0.069	0.071	0.073
e	0.016 BSC		
L	0.014	0.016	0.018
L1	0.020 REF.		

Notes:

1. Controlling dimension is millimeter. Converted inch dimensions are not necessarily exact.
2. Angles are in degrees.

Tape and Reel Dimensions, QFN 1.8 x 1.4 x 0.55, 10L

Carrier Tape

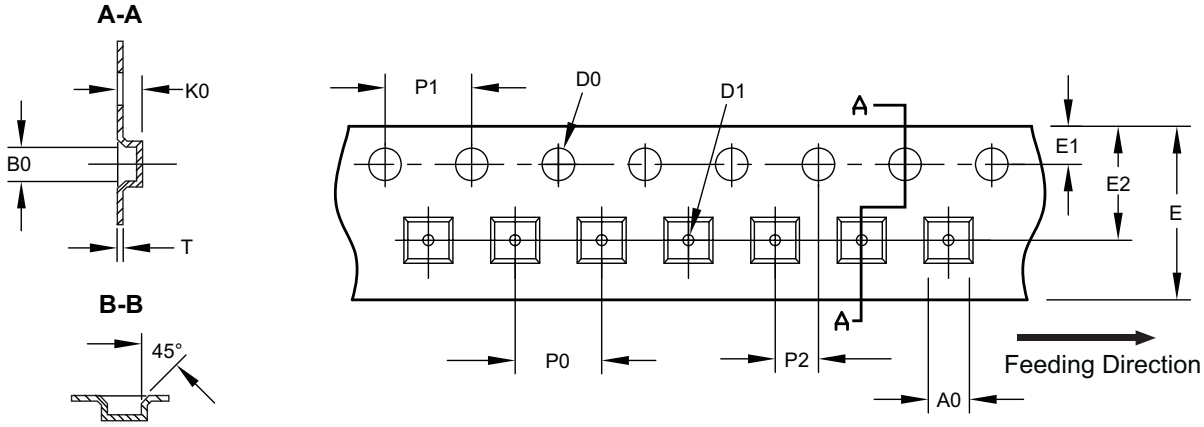

UNIT: mm

Package	A0	B0	K0	D0	D1	E	E1	E2	P0	P1	P2	T
QFN 1.8 x 1.4A	2.04 ±0.05	1.58 ±0.05	0.73 ±0.05	1.50 +0.10/-0	0.50 ±0.05	8.00 +0.30/-0.10	1.75 ±0.10	3.50 ±0.05	4.00 ±0.10	4.00 ±0.10	2.00 ±0.05	0.20 ±0.02

Reel

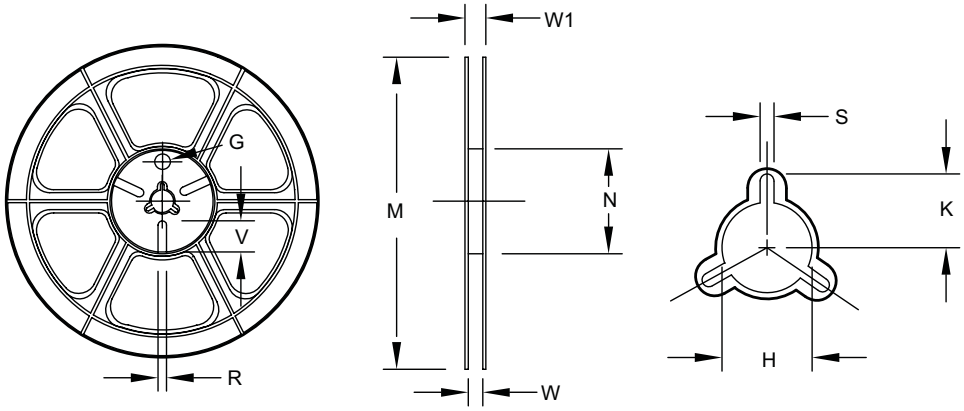

UNIT: mm

Tape Size	Reel Size	M	N	W	W1	H	K	S	G	R	V
8mm	ø178	ø178.0 ±1.0	ø70.5 ±1.0	9.0 ±0.5	11.8 ±1.1	ø13.0 +0.5/-0.2	10.25 ±0.1	2.4 ±0.1	ø9.8	N/A	N/A

Leader/Trailer and Orientation

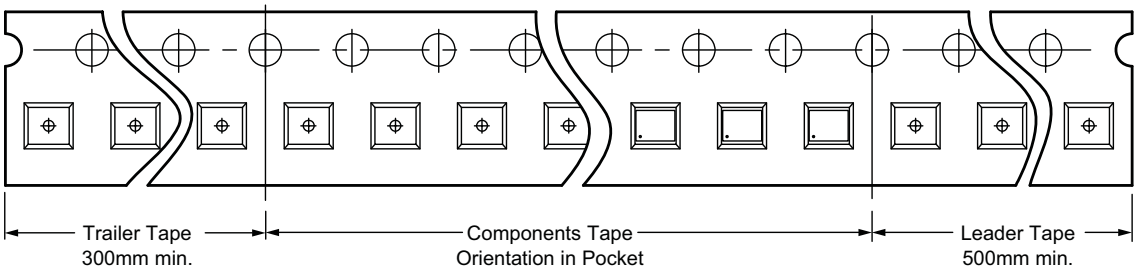

Part Marking

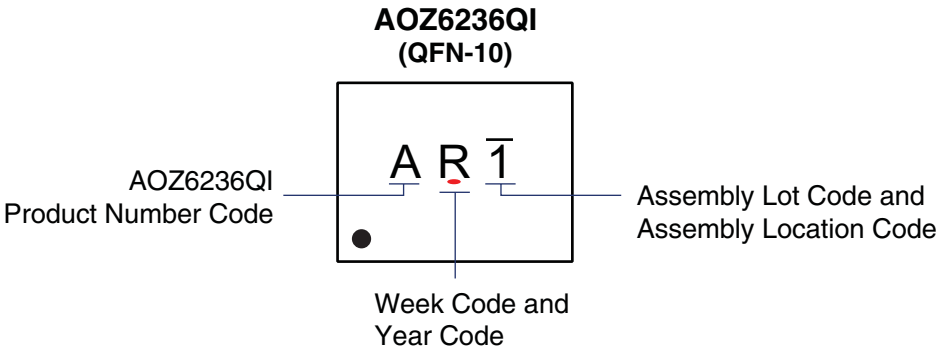

This datasheet contains preliminary data; supplementary data may be published at a later date.
Alpha & Omega Semiconductor reserves the right to make changes at any time without notice.

LIFE SUPPORT POLICY

ALPHA & OMEGA SEMICONDUCTOR PRODUCTS ARE NOT AUTHORIZED FOR USE AS CRITICAL COMPONENTS IN LIFE SUPPORT DEVICES OR SYSTEMS.

As used herein:

1. Life support devices or systems are devices or systems which, (a) are intended for surgical implant into the body or (b) support or sustain life, and (c) whose failure to perform when properly used in accordance with instructions for use provided in the labeling, can be reasonably expected to result in a significant injury of the user.

2. A critical component in any component of a life support, device, or system whose failure to perform can be reasonably expected to cause the failure of the life support device or system, or to affect its safety or effectiveness.