MALLORY Mallory Sonalert Products Inc.	Part # PLD-27A35WQ
Sales Outline Drawing	Revision **A**

Specifications:

Oscillation Frequency (Hz)	3500 ± 500
Operating Voltage (Vdc)	3 ~ 24
Rated Voltage (Vdc)	12
Current Consumption (mA/max)	15 at Rated Voltage
Sound Pressure Level (dB/min)	95 at 30cm at Rated voltage
Tone/Pulse Rate (Hz0	Constant + Slow Pulse 1.2 ±20%
Operating Temperature (°C)	-20 ~ +70
Storage Temperature (°C)	-30 ~ +80
Housing	ABS 757 UL94HB plastic resin (Color: Black)
Lead Wire	28 AWG
Weight (Grams)	8.0
Condition by wave soldering (°C)	245 ±5 / 3±0.5 sec
Condition by hand soldering (°C)	350 ±20 / within 5 sec
Options	For other options contact factory

RoHS Compliant
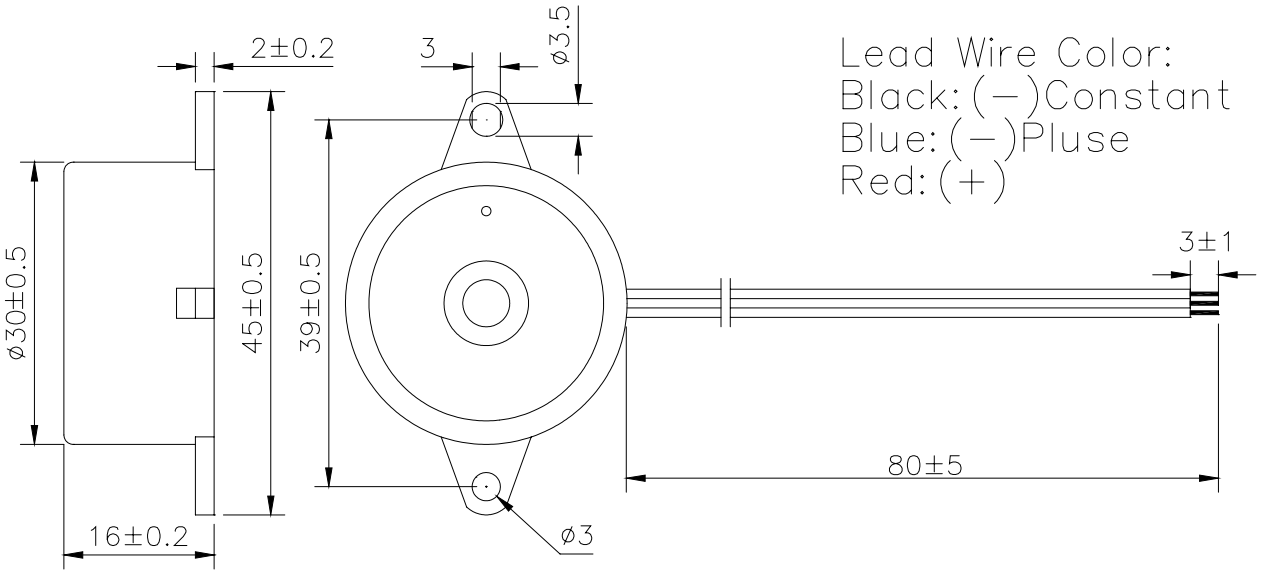
Dimensions: (units: mm)