UNCONTROLLED DOCUMENT

PART NUMBER

SSA–LXH1025SYD

REV.

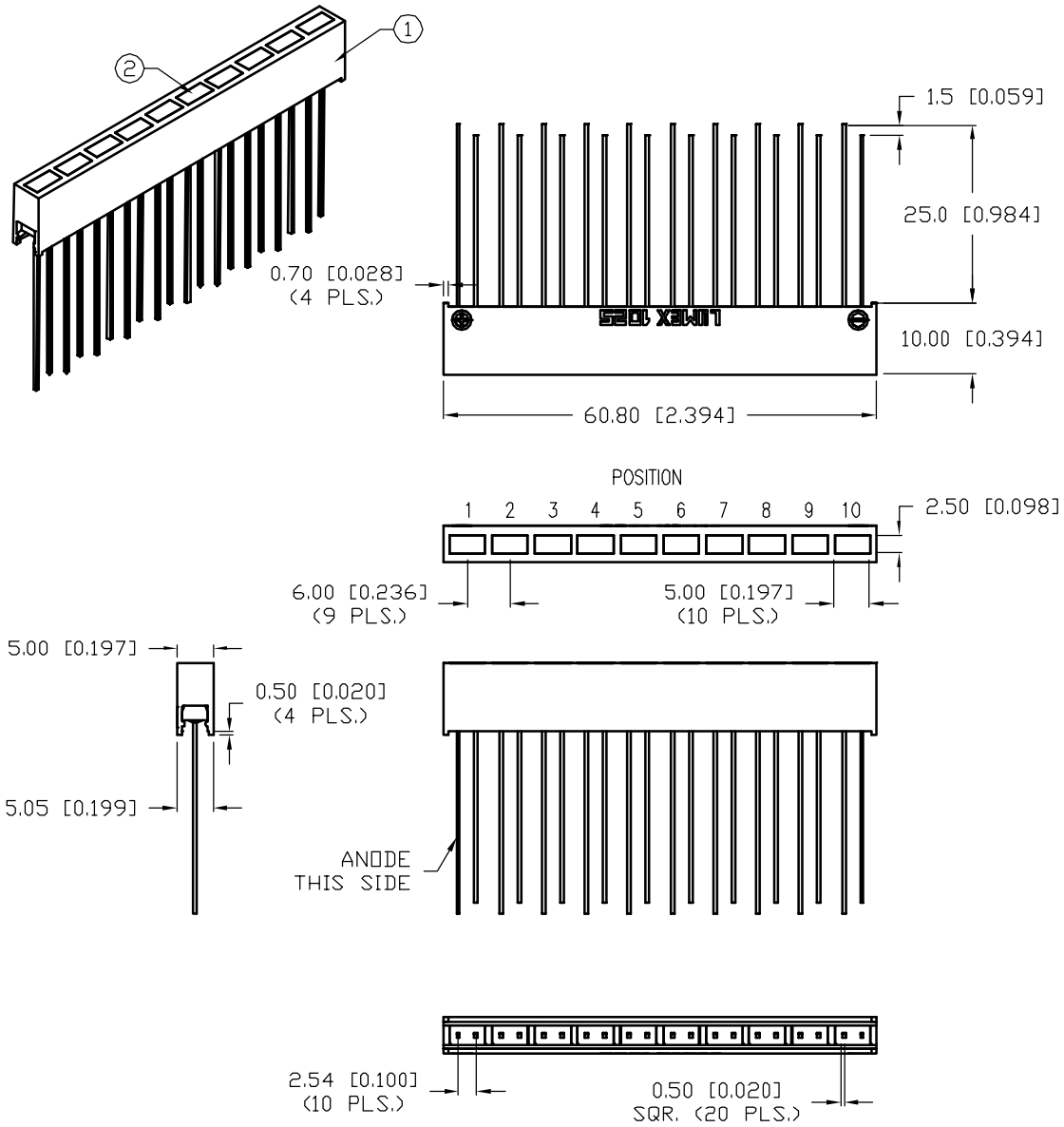

ELECTRO–OPTICAL CHARACTERISTICS T_A=25°C I_f= 20mA

PARAMETER	MIN	TYP	MAX	UNITS	TEST COND
PEAK WAVELENGTH		590		nm	
FORWARD VOLTAGE		2.0	2.5	V_f	
REVERSE VOLTAGE	5.0			V_r	I_r=100µA
AXIAL INTENSITY		100		mcd	I_f = 20mA
VIEWING ANGLE		110		2x theta	
EMITTED COLOR:	YELLOW				
EPOXY LENS FINISH:	YELLOW DIFFUSED				

LIMITS OF SAFE OPERATION AT 25°C PER DIE

PARAMETER	MAX	UNITS
PEAK FORWARD CURRENT*	150	mA
STEADY CURRENT	30	mA
POWER DISSIPATION	105	mW
DERATE FROM 25°C	–1.2	mW/°C
OPERATING, STORAGE TEMP.	–40 TO +85	°C
SOLDERING TEMP.	+260	°C
2.0mm FROM BODY		3 SEC. MAX

* t<10µS

NOTES:

1. SSH–LXH1025 HOLDER. MATERIAL: BLACK NYLON, UL V94–0.
2. SSL–LX2558JSYD, LED. (10 PCS.)
3. SORT LEDS FOR MATCHED INTENSITY.

UNCONTROLLED DOCUMENT

*UNLESS OTHERWISE SPECIFIED TOLERANCES PER DECIMAL PRECISION ARE: X=±1 (±0.039), X.X=±0.5 (±0.020), X.XX=±0.25 (±0.010), X.XXX=±0.127 (±0.005). LEAD SIZE=±0.05 (±0.002), LEAD LENGTH=±0.75 (±0.030). MIN= +DECIMAL PRECISION –0.00 MAX.= +0.00 –DECIMAL PRECISION

REV.

PART NUMBER

SSA–LXH1025SYD

2.5mm x 5mm 10 LED RECTANGULAR ARRAY,

590nm SUPER YELLOW LEDS, YELLOW DIFFUSED LENS.

CONFIDENTIAL INFORMATION

THE INFORMATION CONTAINED IN THIS DOCUMENT IS THE PROPERTY OF LUMEX INC. EXCEPT AS SPECIFICALLY AUTHORIZED IN WRITING BY LUMEX INC., THE HOLDER OF THIS DOCUMENT SHALL KEEP ALL INFORMATION CONTAINED HEREIN CONFIDENTIAL AND SHALL PROTECT SAME IN WHOLE OR IN PART FROM DISCLOSURE AND DISSEMINATION TO ALL THIRD PARTIES.

RELIABILITY NOTE

OUR MANY YEARS OF EXPERIENCE DATA ACCUMULATION INDICATE THAT SOLDER HEAT IS A MAJOR CAUSE OF EARLY AND FUTURE FAILURE. PLEASE PAY ATTENTION TO YOUR SOLDERING PROCESS.

LUMEX INC. We Tame Photons To Work For You

290 E. HELEN ROAD
PALATINE, IL 60067–6976
PHONE: +1.847.359.2790
US WEB: www.lumex.com
TW WEB: www.lumex.com.tw

DRAWN BY:	CHECKED BY:	APPROVED BY:	DATE: 6.6.01
CT			PAGE: 1 OF 1
			SCALE: N/A