Power Stage

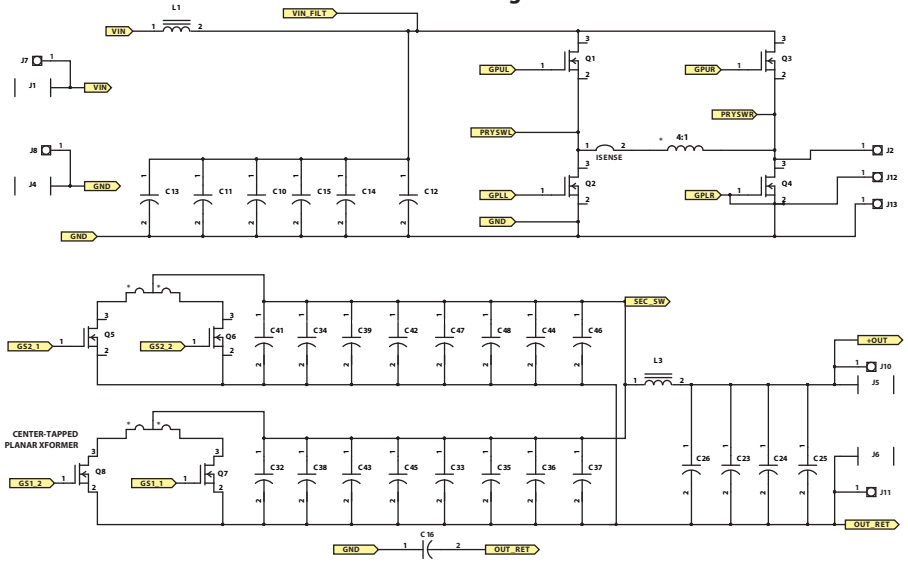

Bias Supply

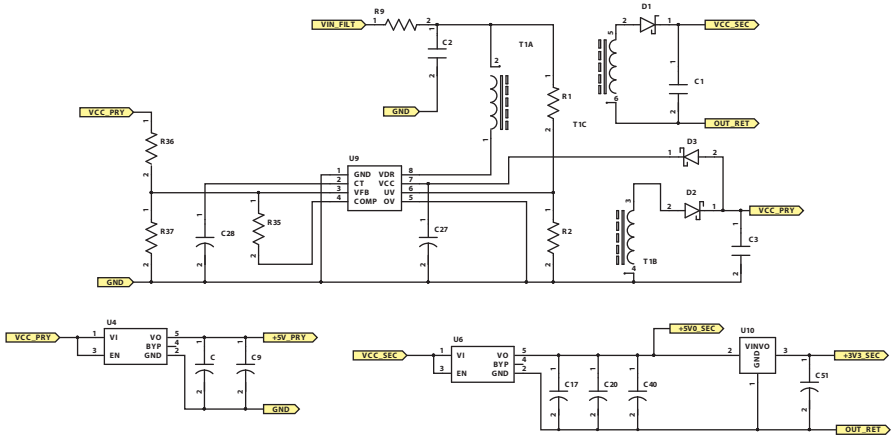

EPC9105 Resonant Bus Converter

Secondary Gate Drive

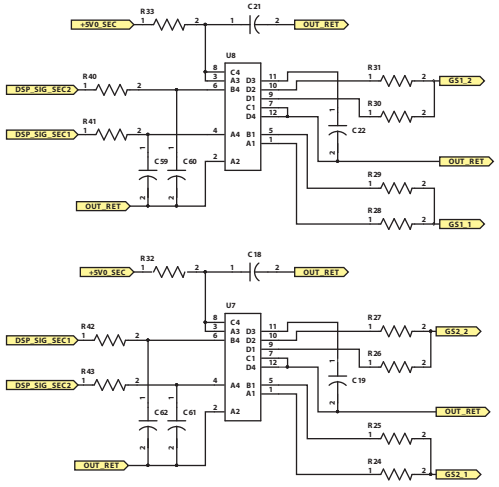

Primary Gate Drive

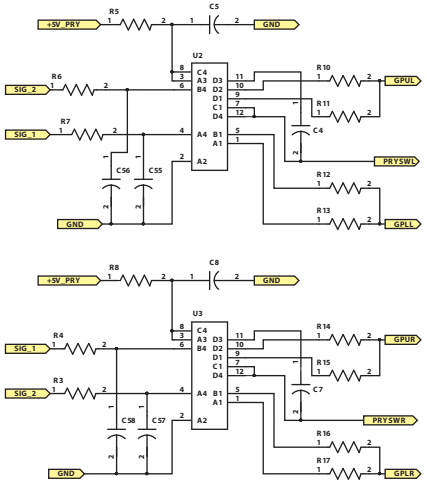

Gate Signal Generation

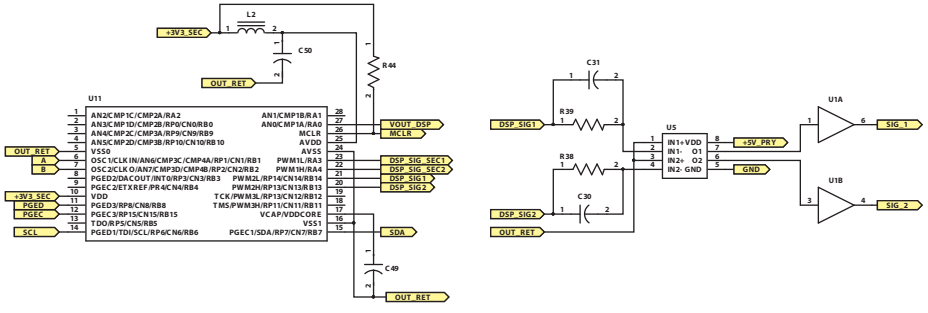
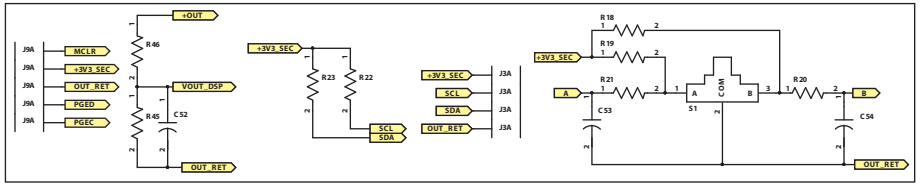
Non Connect Components