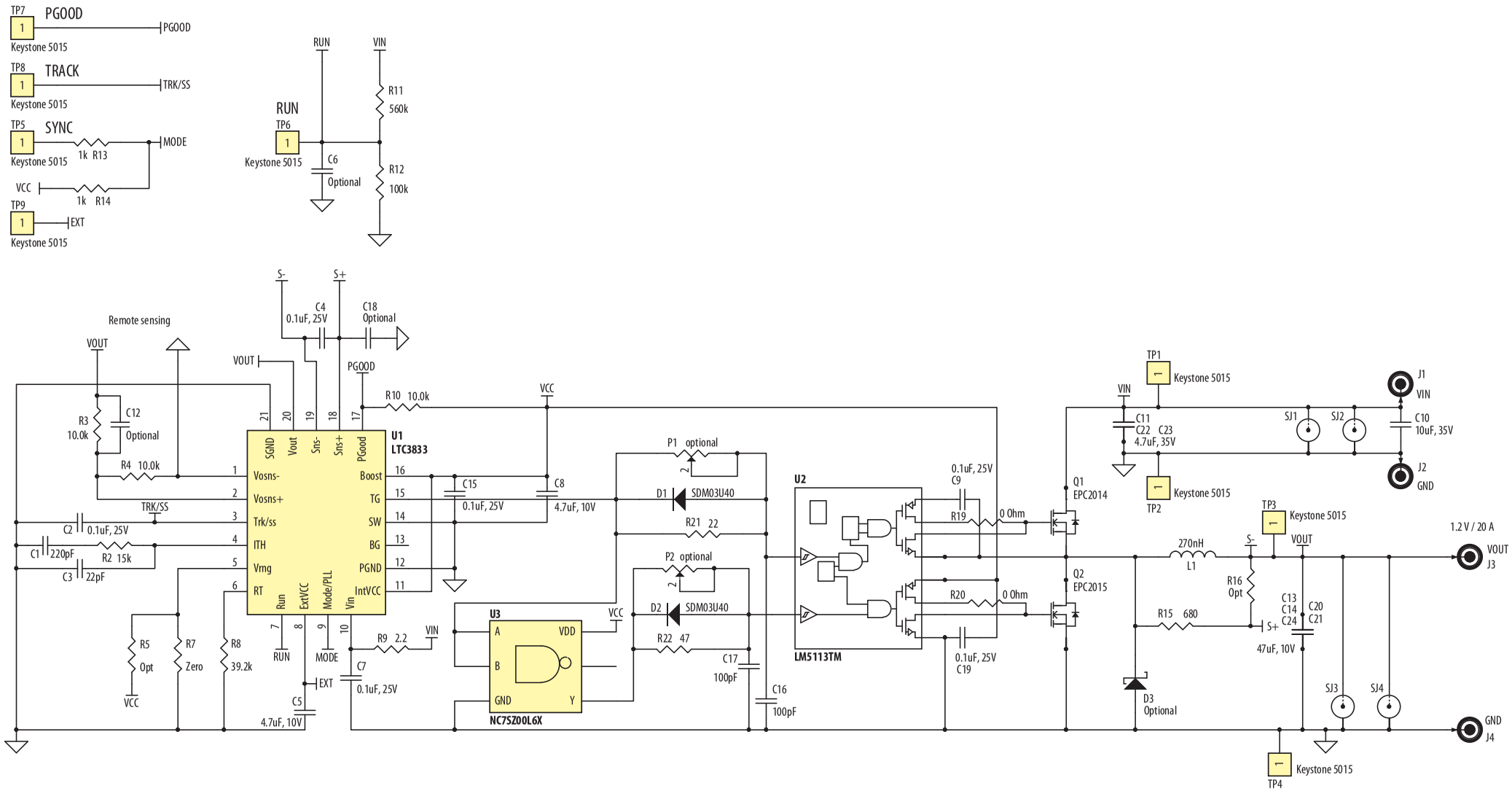

Demonstration Board – EPC9101 Schematic

Rev. 2.0