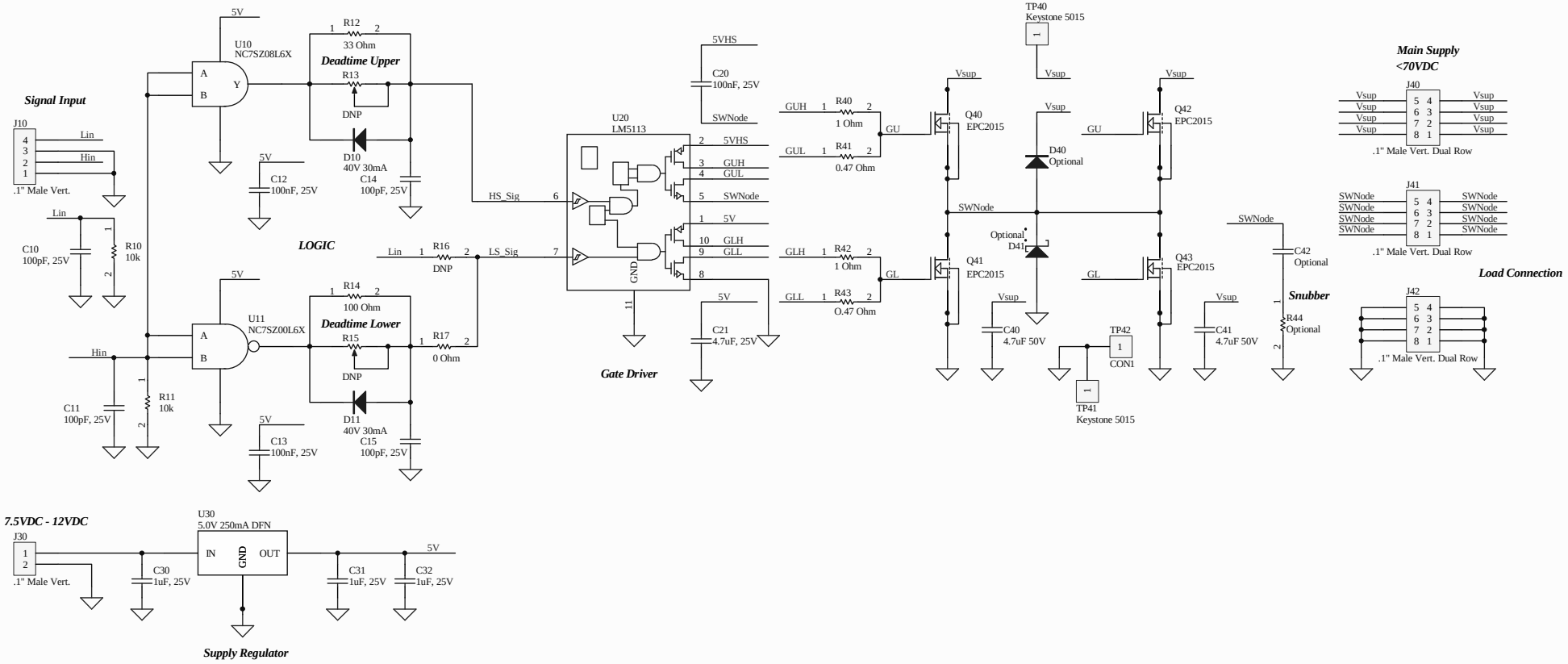

Title **EPC9008 Dual Parallel Eval**		Efficient Power Conversion 909 Sepulveda Blvd. Ste 230 El Segundo, CA 90245 U.S.A. www.epc-co.com
Size: A	Revision: 1	
Date: 10/26/2012	Sheet 1 of 4	
File: 2DeviceParallelSchematic100V.SchDot		